PLL and CPU Board

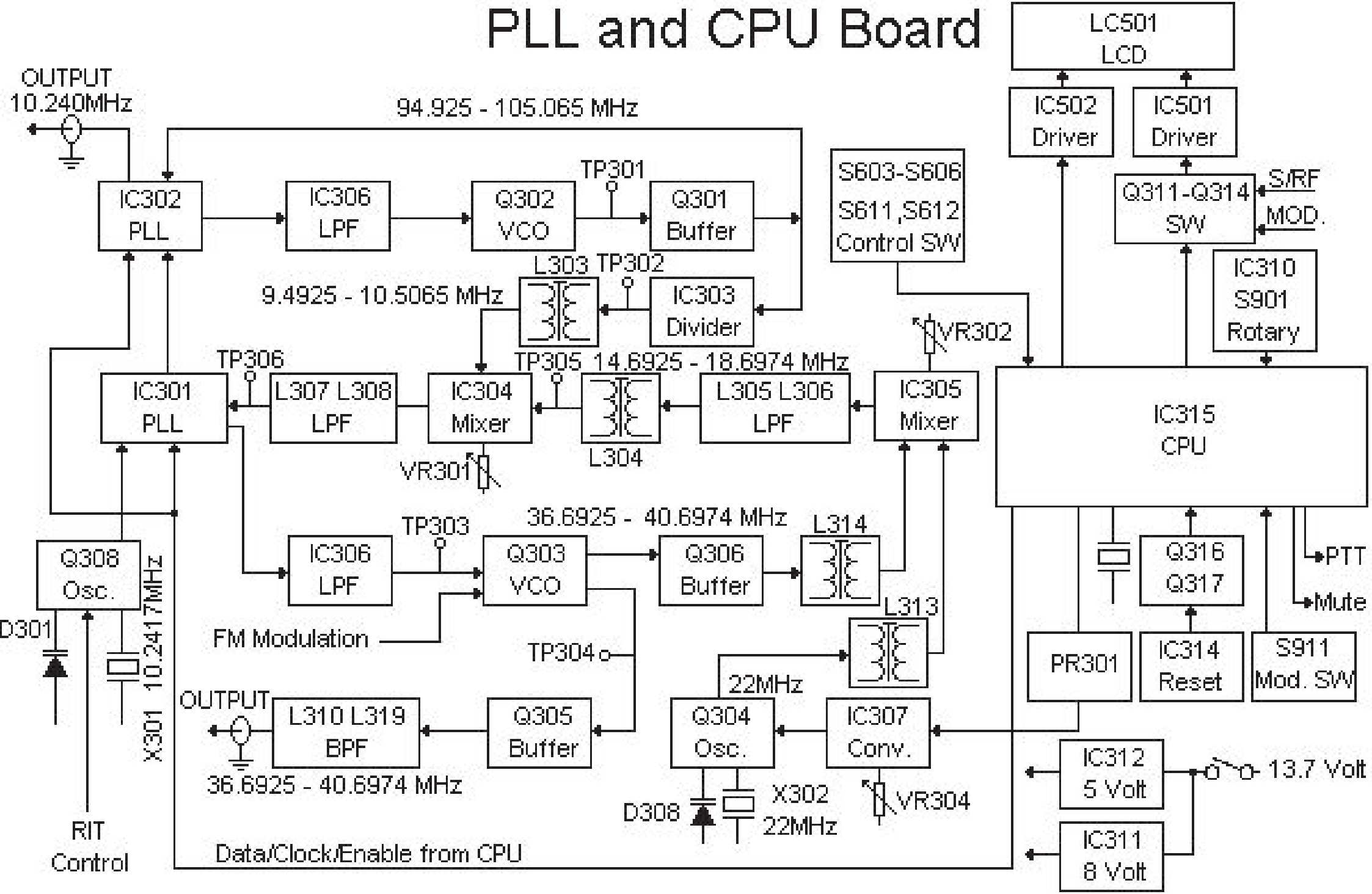

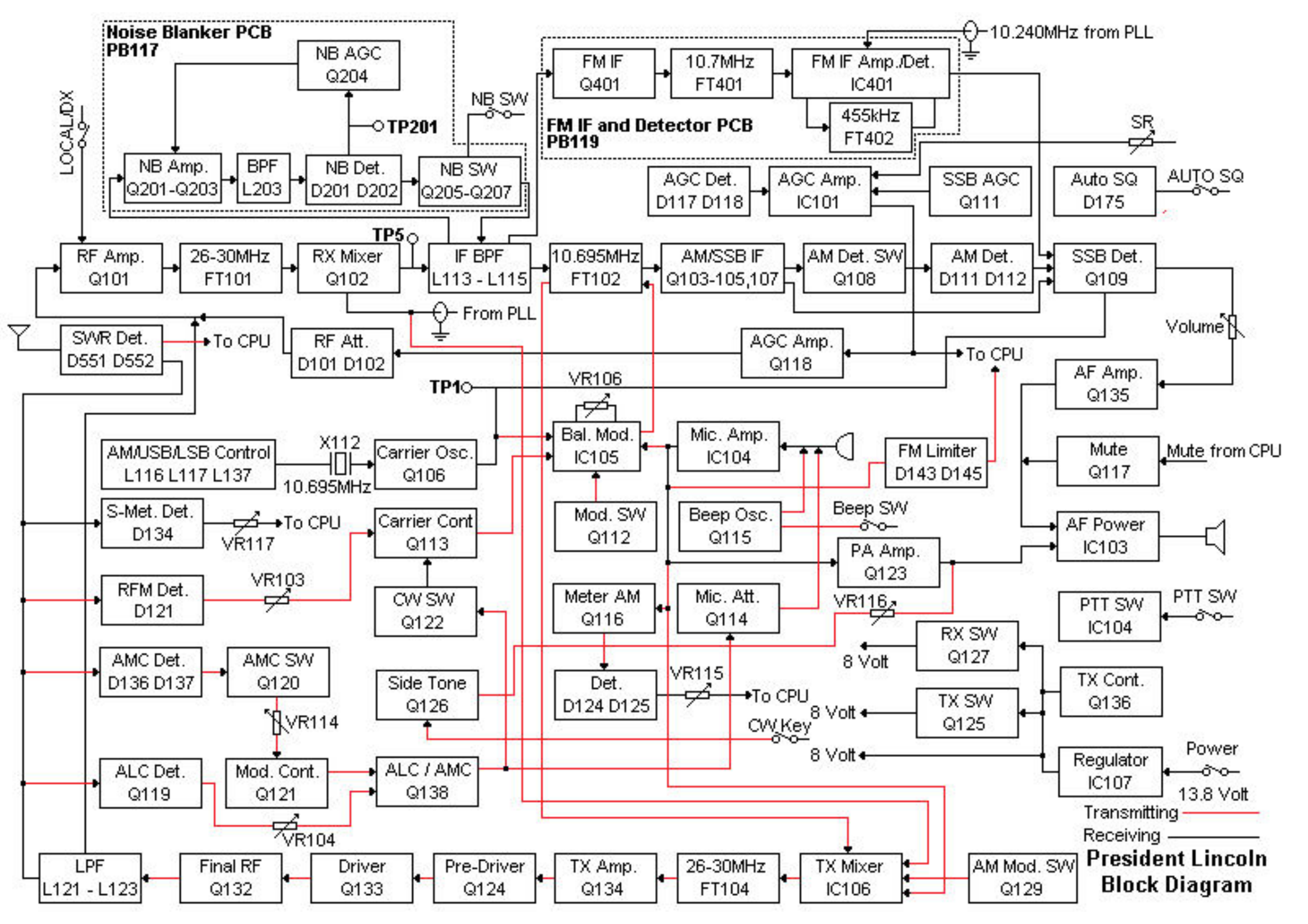
Noise Blanker PCB
PB117
NB AGC
Q204
TP201
NB SW
LOCAL/DX
NB Amp.
Q201-Q203
BPF
L203
NB Det.
D201 D202
NB SW
Q205-Q207
10.240MHz from PLL
FM IF
Q401
10.7MHz
FT401
FM IF Amp./Det.
IC401
455kHz
FT402
FM IF and Detector PCB
PB119
SR
AGC Det.
D117 D118
AGC Amp.
IC101
SSB AGC
Q111
Auto SQ
D175
AUTO SQ
TP5
RF Amp.
Q101
26-30MHz
FT101
RX Mixer
Q102
IF BPF
L113 - L115
10.695MHz
FT102
AM/SSB IF
Q103-105,107
AM Det. SW
Q108
AM Det.
D111 D112
SSB Det.
Q109
From PLL
SWR Det.
D551 D552
To CPU
RF Att.
D101 D102
AGC Amp.
Q118
To CPU
Volume
TP1
VR106
AF Amp.
Q135
AM/USB/LSB Control
L116 L117 L137
X112
10.695MHz
Carrier Osc.
Q106
Bal. Mod.
IC105
Mic. Amp.
IC104
FM Limiter
D143 D145
Mute
Q117
Mute from CPU
S-Met. Det.
D134
VR117
To CPU
Carrier Cont
Q113
Mod. SW
Q112
Beep Osc.
Q115
Beep SW
AF Power
IC103
PA Amp.
Q123
RFM Det.
D121
VR103
CW SW
Q122
Meter AM
Q116
Mic. Att.
Q114
VR116
PTT SW
IC104
PTT SW
RX SW
Q127
8 Volt
AMC Det.
D136 D137
AMC SW
Q120
Side Tone
Q126
Det.
D124 D125
VR115
To CPU
TX Cont.
Q136
TX SW
Q125
8 Volt
VR114
CW Key
8 Volt
ALC Det.
Q119
Mod. Cont.
Q121
ALC / AMC
Q138
Regulator
IC107
Power
13.8 Volt
VR104
Transmitting
Receiving
LPF
L121 - L123
Final RF
Q132
Driver
Q133
Pre-Driver
Q124
TX Amp.
Q134
26-30MHz
FT104
TX Mixer
IC106
AM Mod. SW
Q129
President Lincoln
Block Diagram

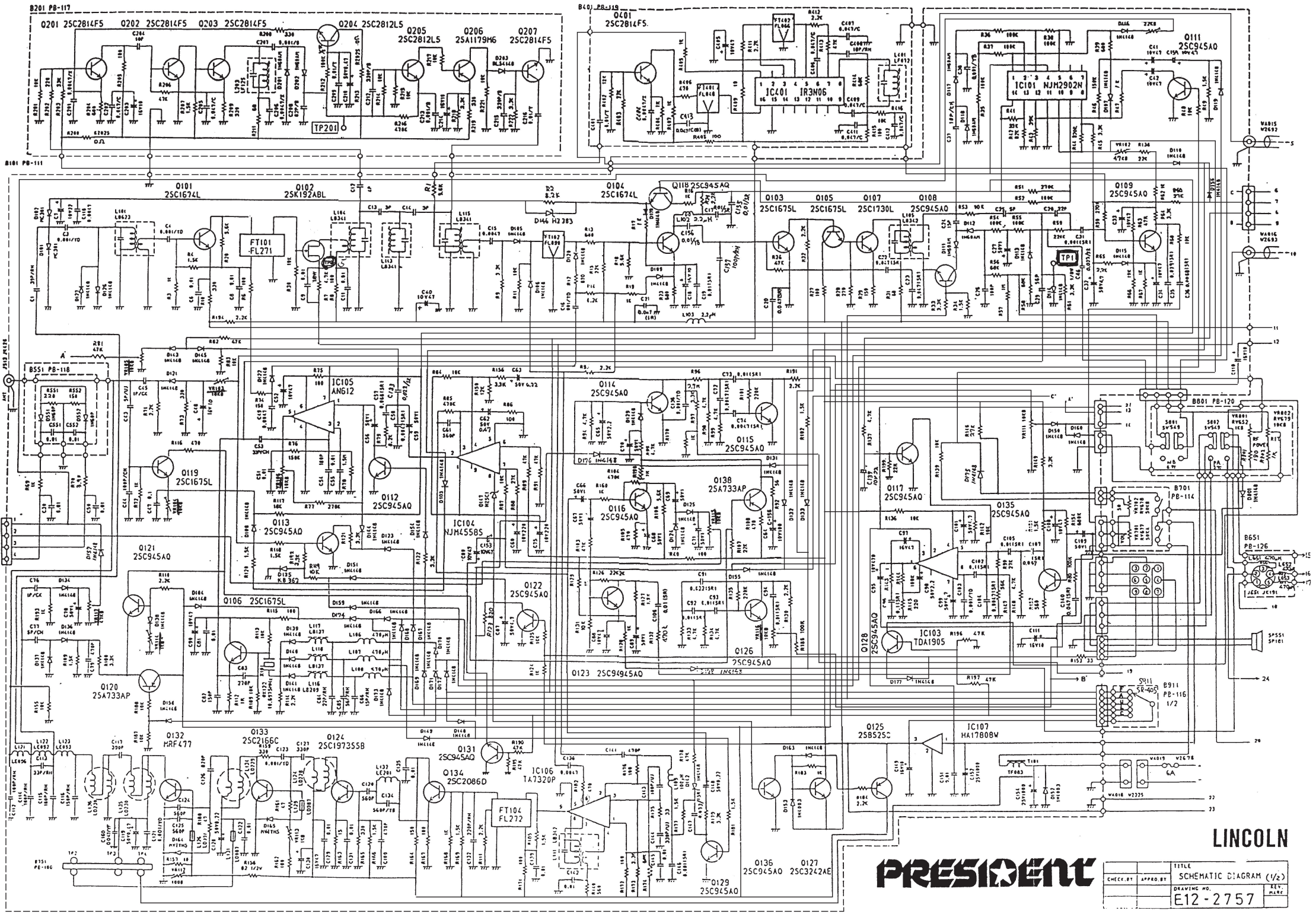
Q201 2SC2814F5
Q202 2SC2814F5
Q203 2SC2814F5
Q204 2SC2812L5
Q205 2SC2812L5
Q206 2SA1179H6
Q207 2SC2814F5
Q401 2SC2814F5
IC401 IR3N06
IC101 NJM2902N
Q111 2SC945AQ
Q101 2SC1674L
Q102 2SK192ABL
Q104 2SC1674L
Q118 2SC945AQ
Q103 2SC1675L
Q105 2SC1675L
Q107 2SC1730L
Q108 2SC945AQ
Q109 2SC945AQ
FT101 FL271
FT102 FL898
FT401 FL048
D146 HZ383
IC105 AN612
IC104 NJM4558S
Q114 2SC945AQ
Q115 2SC945AQ
Q116 2SC945AQ
Q138 2SA733AP
Q117 2SC945AQ
Q135 2SC945AQ
Q119 2SC1675L
Q112 2SC945AQ
Q113 2SC945AQ
Q121 2SC945AQ
Q122 2SC945AQ
Q126 2SC945AQ
Q123 2SC945AQ
Q128 2SC945AQ
IC103 TDA1905
Q106 2SC1675L
Q120 2SA733AP
Q132 MRF477
Q133 2SC2166C
Q124 2SC1973SSB
Q131 2SC945AQ
Q134 2SC2086D
IC106 TA7320P
FT104 FL272
Q125 2SB525C
IC107 HA17808W
Q136 2SC945AQ
Q127 2SC3242AE
Q129 2SC945AQ
B201 PB-117
B401 PB-118
B101 PB-111
BSS1 PB-118
B801 PB-120
B701 PB-114
B651 PB-126
B911 PB-116 1/2
TP201
TP1
LINCOLN
PRESIDENT
TITLE
SCHEMATIC DIAGRAM (1/2)
DRAWING NO.
E12-2757
REV.
CHECK BY
APPRO.BY

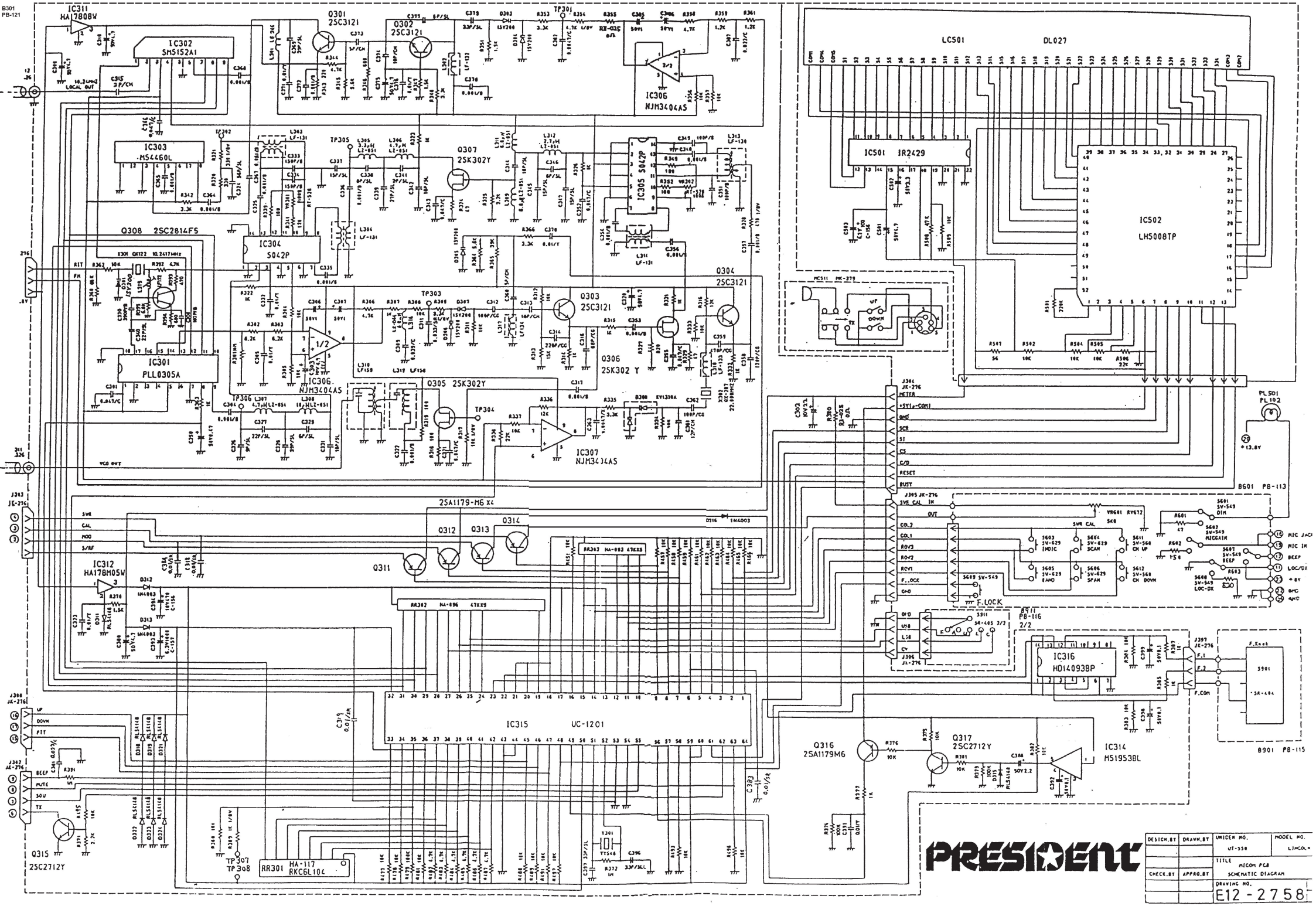
B301 PB-121
IC311 HA17808W
IC302 SM5152A1
Q301 2SC3121
Q302 2SC3121
IC306 NJM3404AS
IC303 M54460L
Q307 2SK302Y
IC305 S042P
Q308 2SC2814F5
IC304 S042P
Q303 2SC3121
Q304 2SC3121
Q306 2SK302 Y
IC301 PLL0305A
IC306 NJM3404AS
Q305 2SK302Y
IC307 NJM3404AS
LC501 DL027
IC501 IR2429
IC502 LH5008TP
MC511 MK-279
PL501 PL102
B601 PB-113
2SA1179-M6 X4
Q312
Q313
Q314
Q311
IC312 HA178M05W
IC316 HD14093BP
B911 PB-116 2/2
IC315 UC-1201
Q316 2SA1179M6
Q317 2SC2712Y
IC314 M51953BL
B901 PB-115
Q315 2SC2712Y
RR301 HA-117 RKC6L104
PRESIDENT
DESIGN.BY
DRAWN.BY
UNIDEN NO. UT-558
MODEL NO. LINCOLN
TITLE MICOM PCB SCHEMATIC DIAGRAM
CHECK.BY
APPRO.BY
DRAWING NO. E12 - 2758

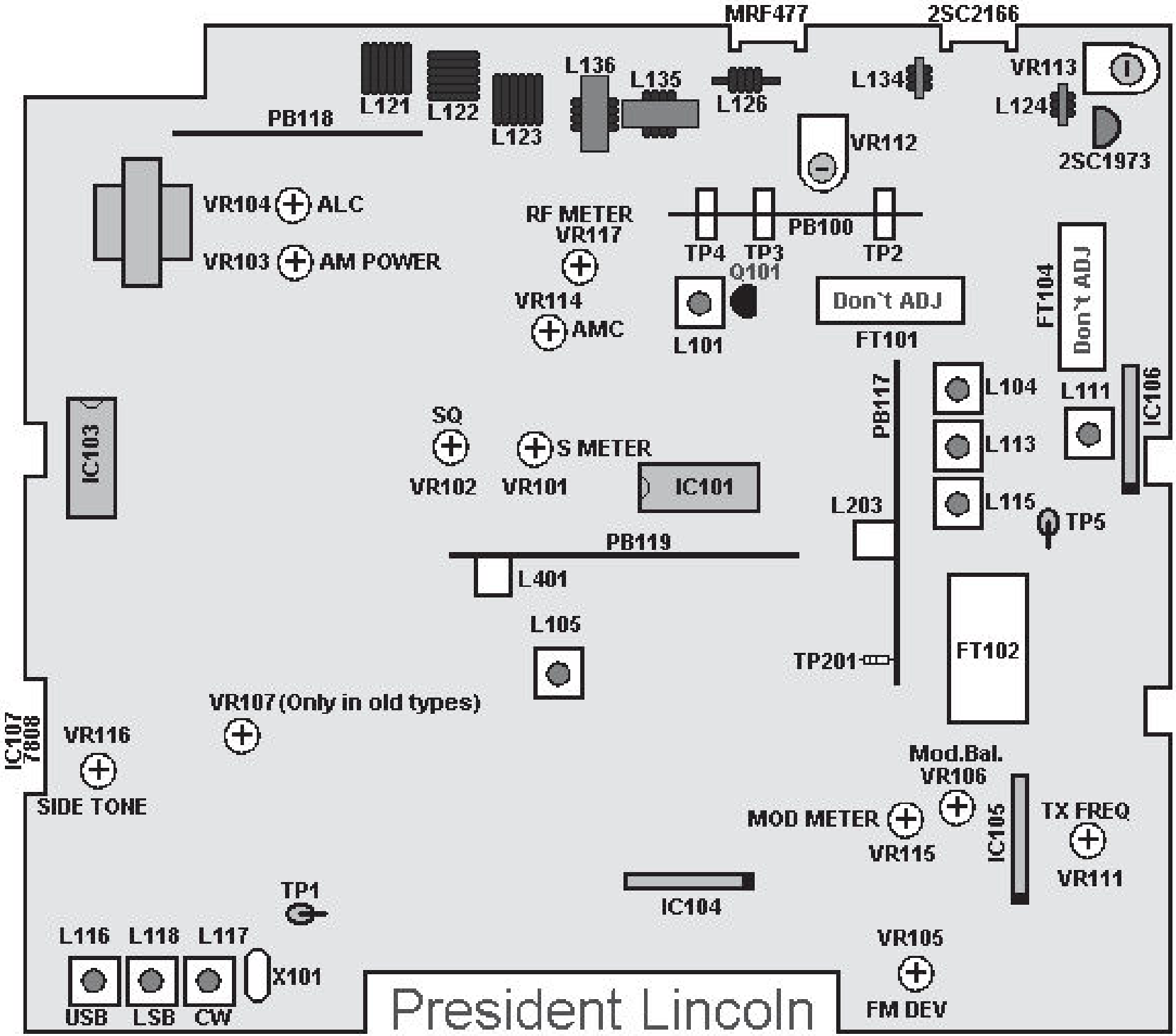
MRF477
2SC2166
L121
L122
L123
L136
L135
L126
L134
VR113
L124
2SC1973
PB118
VR112
VR104
ALC
VR103
AM POWER
RF METER
VR117
VR114
AMC
TP4
TP3
PB100
TP2
Q101
L101
Don`t ADJ
FT101
FT104
Don`t ADJ
L104
L111
IC106
PB117
L113
L115
TP5
IC103
SQ
VR102
S METER
VR101
IC101
L203
PB119
L401
L105
TP201
FT102
VR107 (Only in old types)
IC107
7808
VR116
SIDE TONE
Mod.Bal.
VR106
MOD METER
VR115
IC105
TX FREQ
VR111
TP1
IC104
L116
L118
L117
X101
USB
LSB
CW
VR105
FM DEV
President Lincoln

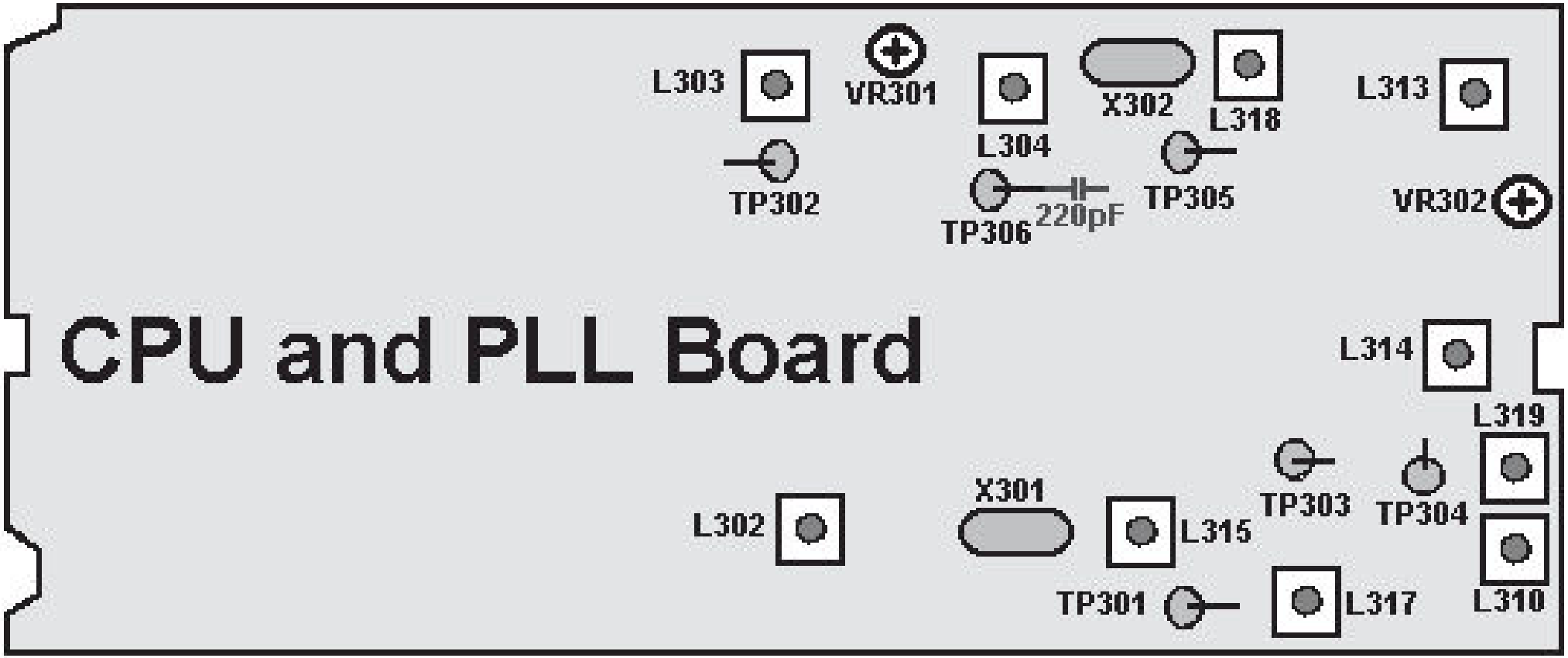
CPU and PLL Board
L303
VR301
L304
X302
L318
L313
TP302
TP306
220pF
TP305
VR302
L314
L319
TP303
TP304
X301
L302
L315
L310
TP301
L317

B301 PB-121AB(TOP VIEW)

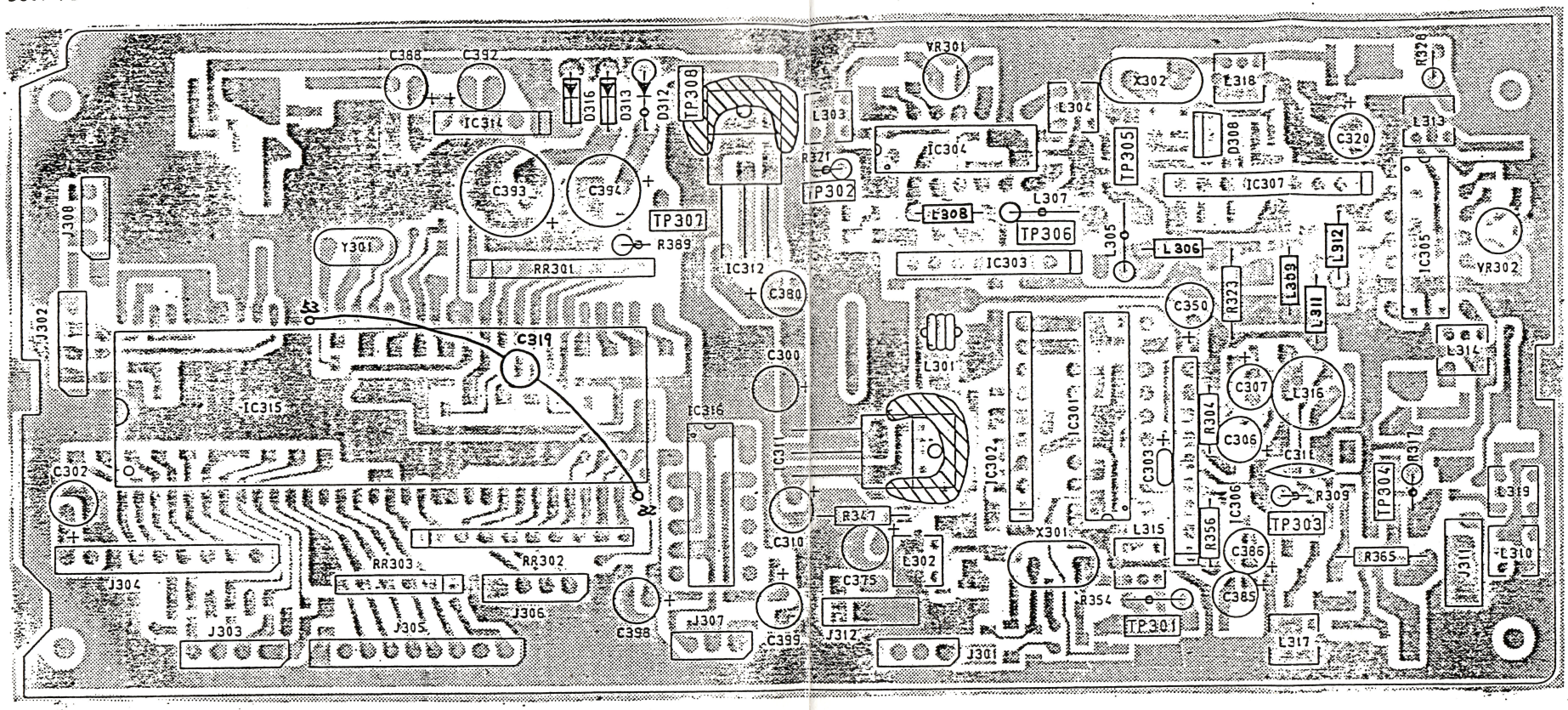

C300	50V4.7
C302	10V22
C303	10V4.7(T)
C306	50V1
C307	50V1
C310	50V4.7
C311	0.033(SR)
C320	50V4.7
C350	50V0.47
C375	50V4.7
C380	50V4.7
C385	50V1
C386	50V1
C388	50V2.2
C392	50V0.1
C393	6.3V1000 C-157
C394	10V470 C-156
C398	50V0.1
C399	50V0.1
C319	0.01 (SR)

R304	10K
R309	3.3K 1/8W
R317	10K 1/8W
R321	330 1/8W
R323	1K
R328	470 1/8W
R347	1.5K
R354	4.7K 1/8W
R356	10K
R365	39K
R389	1K 1/8W

L301	LE246
L302	LF132
L303	LF131
L304	LF131
L305	LZ051 3.3μ
L306	LZ051 4.7μ
L307	LZ051 4.7μ
L308	LZ051 10μ
L309	LZ051 6.8μ
L310	LF159
L311	LZ051 6.8μ
L312	LZ051 2.7μ
L313	LF130
L314	LF131
L315	LF172
L316	LZ044 6.8
L317	LF134
L318	LF133
L319	LF158

X301	QX122 10.2417MHz
X302	QX287 22.0MHz

IC301	PLL0305A
IC302	SM5152A1
IC303	M54460L
IC304	S042P
IC305	S042P
IC306	NJM3404AS
IC307	NJM3404AS
IC311	HA17808W
IC312	HA178M05W
IC314	M51953BL
IC315	UC1201
IC316	HD14093B

D308	KV1330A
D312	1N4003
D313	1N4003
D316	1N4003

J301	JK276 3P
J302	JK276 4P
J303	JK276 4P
J304	JK276 9P
J305	JK276 9P
J306	JK276 4P
J307	JK276 3P
J308	JK276 3P
J311	JK326
J312	JK326

RR301	HA117 RKC6L104
RR302	HA096 47Kx9
RR303	HA093 47Kx5

VR301	RT528 100B
VR302	RT528 100B

Y301	YY548

※ ▨ ..... BOND LOCK

IC311,312 取付図

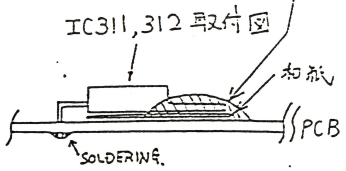

※ L302・317・318・315は調整後 パラフィンロックすること。

IC312 と L303が タッチしない様に注意すること

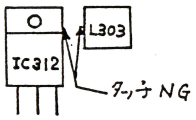

NOTES:
1. RESISTANCE VALUES ARE SHOWN IN OHMS UNLESS OTHERWISE NOTED. (K-KILO OHM, M-MEG OHM)
2. RESISTOR WATTAGES ARE 1/6W UNLESS OTHERWISE NOTED.

共通使用	UT-550A

DESIGN.BY	DRAWN.BY	UNIDEN NO.	MODEL NO.
S63.3.18	63.3.9	UT-550Z	LINCOLN
CHECK.BY	APPRO.BY	TITLE MICOM PCB PARTS ASSEMBLY TOP VIEW	
63.3.18		E23-7267	REV. MARK

63.3.22 M.Moteura

HT88-185

UNIDEN CORP.

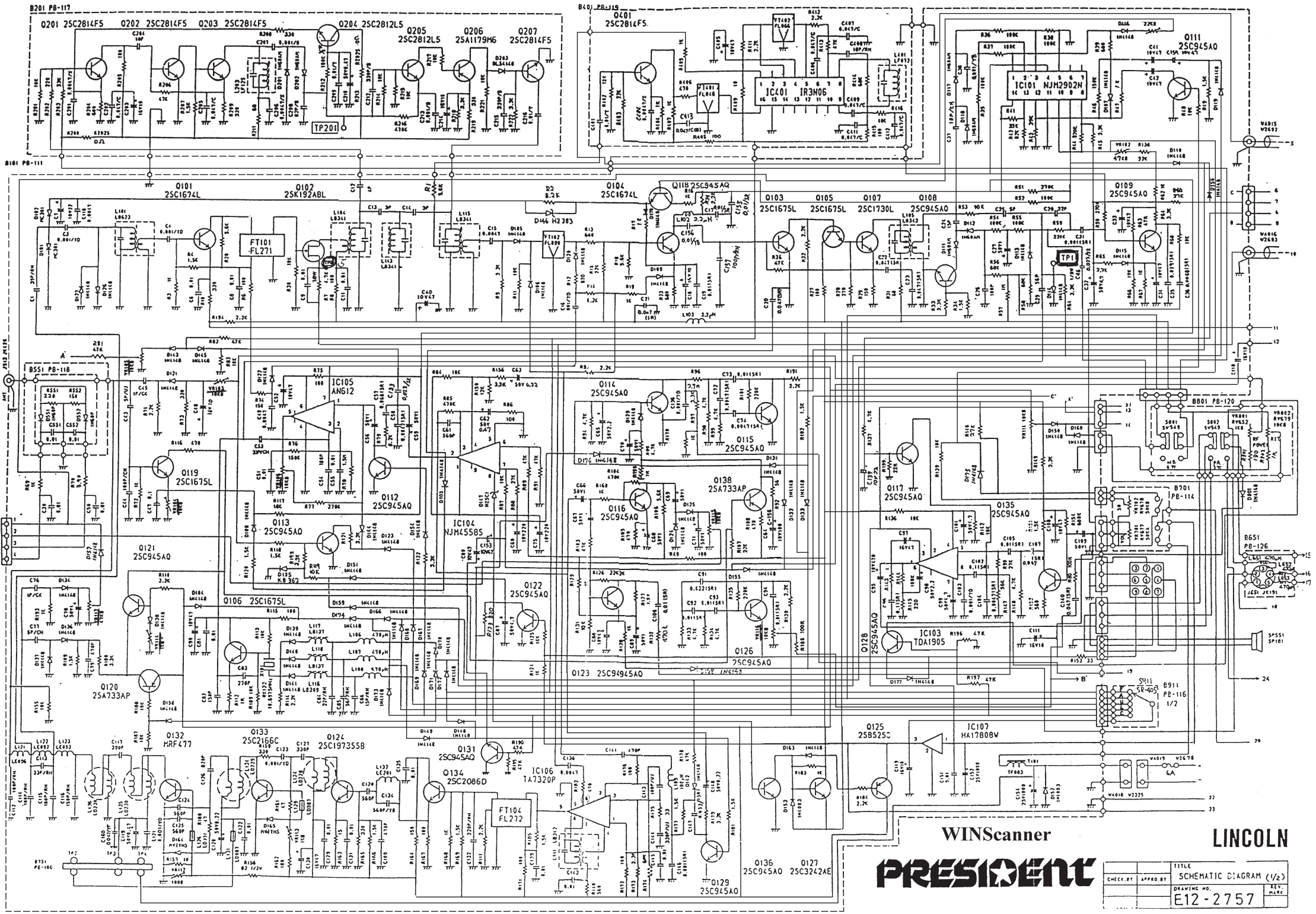
WINScanner
LINCOLN
PRESIDENT
TITLE
SCHEMATIC DIAGRAM (1/2)
DRAWING NO.
E12-2757
CHECK BY
APPRO BY
REV.
Q201 2SC2814F5
Q202 2SC2814F5
Q203 2SC2814F5
Q204 2SC2812L5
Q205 2SC2812L5
Q206 2SA1179H6
Q207 2SC2814F5
Q401 2SC2814F5
IC401 IR3N06
IC101 NJM2902N
Q111 2SC945AQ
Q101 2SC1674L
Q102 2SK192ABL
Q104 2SC1674L
Q118 2SC945AQ
Q103 2SC1675L
Q105 2SC1675L
Q107 2SC1730L
Q108 2SC945AQ
Q109 2SC945AQ
FT101 FL271
FT102 FL898
FT401 FL848
FT104 FL272
IC105 AN612
IC104 NJM4558S
Q114 2SC945AQ
Q115 2SC945AQ
Q138 2SA733AP
Q116 2SC945AQ
Q117 2SC945AQ
Q135 2SC945AQ
Q119 2SC1675L
Q112 2SC945AQ
Q113 2SC945AQ
Q121 2SC945AQ
Q122 2SC945AQ
Q126 2SC945AQ
Q123 2SC945AQ
Q128 2SC945AQ
IC103 TDA1905
Q106 2SC1675L
Q120 2SA733AP
Q132 MRF477
Q133 2SC2166C
Q124 2SC1973SSB
Q131 2SC945AQ
Q134 2SC2086D
IC106 TA7320P
Q125 2SB525C
IC107 HA17808W
Q136 2SC945AQ
Q127 2SC3242AE
Q129 2SC945AQ
B201 PB-117
B401 PB-118
B101 PB-111
B801 PB-120
B701 PB-114
B651 PB-126
B911 PB-116 1/2
BSS1 PB-118
TP201
TP1

PRESIDENT LINCOLN (HR 2510) MODS

by Roger Perales

http://www.gj.net/~perales

www.president.com

Downloaded from www.cbradio.nl

Table of Contents

To convert the HR2510 to 11 Meter operation: 4

To convert the Lincoln to 11 Meter operation: 5

HR2510 Modification for increased MicGain 6

President or Uniden HR-2510 Variable Power Modification 7

Increasing the power output for the HR2510 8

Modification of the HR2510 Mic buttons to operate the VFO 10

- **MOD # 1 ..... 10**
- **MOD # 2 ..... 11**

Talkback Removal 13

- **MOD #1 - The Relay Approach 13**
- **MOD #2 - The Solid State Approach I 14**
- **MOD #3 - The Solid State Approach II 15**

HR2510 RIT / Clarifier Mods 16

- **RIT MOD I 16**
- **RIT MOD II 16**
- **RIT MOD III 16**
- **RIT MOD IV 17**

HR2510 Misc. Enhancements. 18

- **Increasing the Receive Audio I 18**
- **Increasing the Receive Audio II 18**
- **Increasing the Receive Audio III 18**
- **Mute circuit improvement 18**
- **Roger Beep Mods 18**
- **Adding an external meter to the HR2510 ..... 19**

If you are really interested, I suggest trying the CHIPSWITCH. 20

24 MHZ Broadband instructions for your HR2510 21

MOD #1 21

MOD #2 A simpler method... 22

HR2510 Alignment Instructions - (Taken from the Uniden Service Manual) 23

Alignment of P.L.L. and Carrier Oscillator Portion 23

Alignment of Transmitter Portion 24

Alignment of Receiver Portion 26

HR2510 Alignment and Test Point Layout 27

Synthesizer / Microprocessor / PLL PCB 27

Main PCB 27

HR2510 Circuit Block Diagram 29

Microphone wiring 29

Some interesting e-mails 31

Subject: Re: Kterou stanici vybrat ? 31

Subject: Re: Lincoln mods homepage 32

Subject: Mirror 32

To convert the HR2510 to 11 Meter operation:

Remove the cover on the speaker side of the radio. You will need to loosen the 4 screws (2 on each side) that secure the SYNTH PCB Frame to the chassi. - You do not need to remove these screws - You need to remove the 4 screws that secure the SYNTH PCB to the metal frame.

Now flip the SYNTH PCB over, Locate the pins of the Microprocessor. In some versions of the HR2510 there may be Grey Epoxy covering one end of the Microprocessor. You may be able to peel the epoxy right off to expose the pins of the IC. If it is not soft enough to peel off, you can use a 400W hair dryer to heat the epoxy enough to remove it.

Cut the ground trace connected to pins 34 & 35, jump pins 34 & 35 to the free end of Resistor pack RR301 (see diagram) or connect a 4.5K -15K ohm resistor from pins 34 & 35 to pin 3 of IC312 (5V

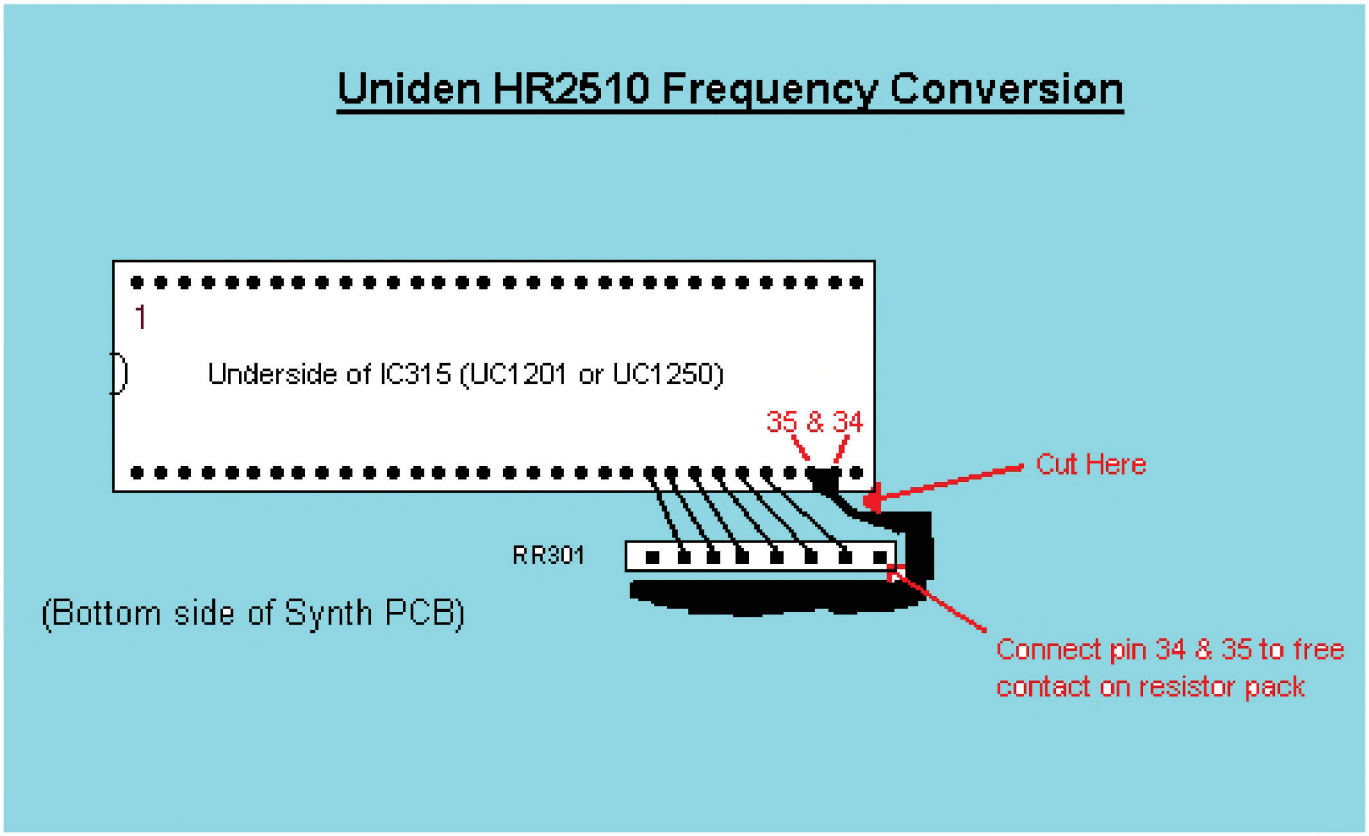

regulator).

This will give complete coverage from 26.000 MHz to 29.699 MHz (Some radios will go to 29.999 MHz)

To convert the Lincoln to 11 Meter operation:

Remove the cover on the speaker side of the radio..

Locate the the Microprocessor on the SYNTH PCB.

Tie a jumper wire from the thru plate via hole at the end of the trace the bare end of the 10K ohm

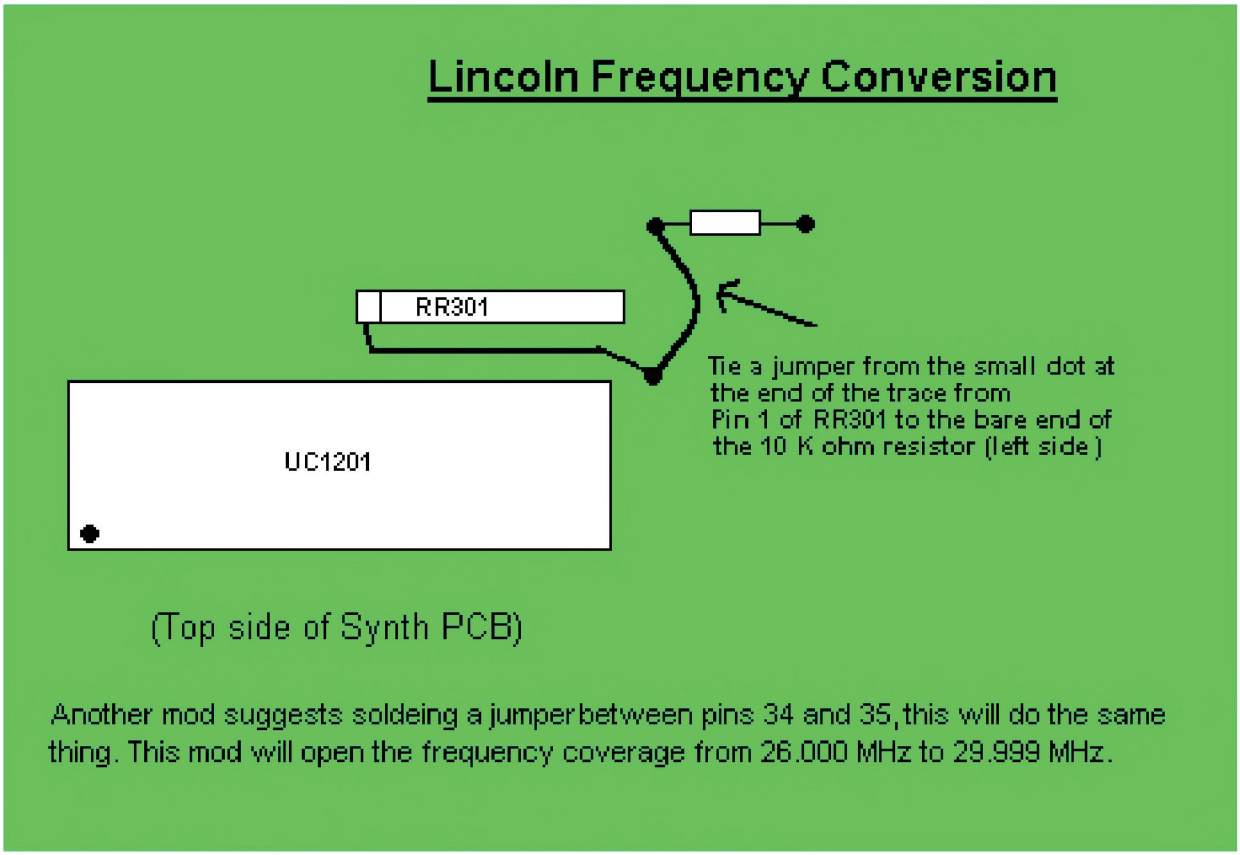

Resistor. (see diagram) or connect pins 34 & 35 together..

HR2510 Modification for increased MicGain

This mod will increase the AM modulation.

The AM modulation adjustment is VR114, which is marked >AMC= on the main circuit board.

To get more, Q114 is the Mic Attenuator, This limits the audio.

Q114 is located near the front of the circuit board in the center to the left of IC 104, above C153.

To modify this, remove Q114 and bend the Emmitter leg up from the circuit board and re install.

Put a 1000 ohm resistor in the vacant hole and solder to the board.

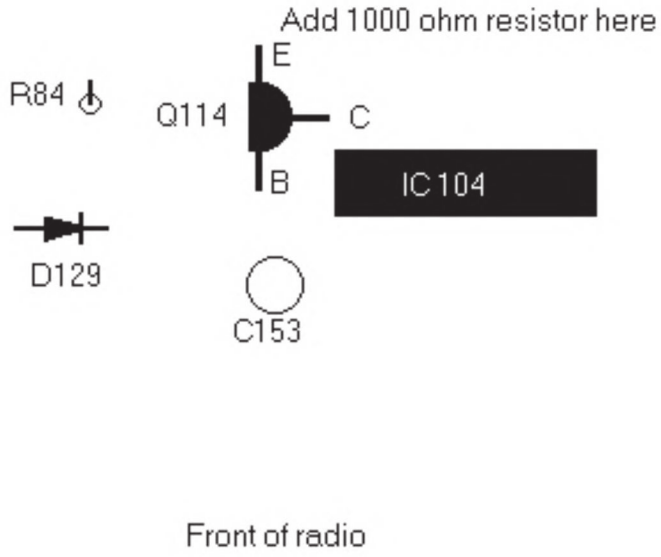

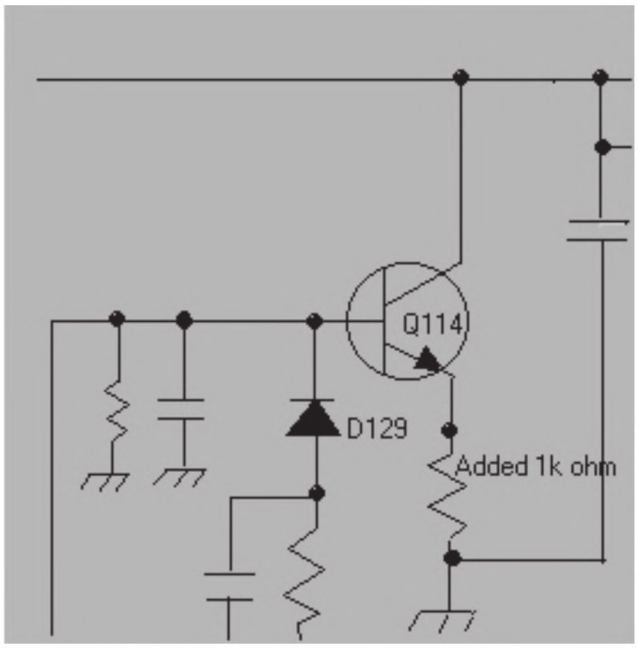

Solder the other end of the resistor to the Emitter leg of Q114.

This will allow more modulation with the >stock= mic, and will allow a Power Mic to truly perform! The AMC control will still function so using a modulation meter you will be able to set it to avoid overmodulation.

Another Mod Suggests Clipping D129 to remove the ALC and AM limiting. I have heard from one user that this mod works exceptionally well.. I have not tried this mod, If anyone else has, please let me know the results.

Send E-Mail to rogerbird@juno.com

President or Uniden HR-2510 Variable Power Modification

The HR-2510 does not have a varible output power feature as it comes from the manufacturer. The following

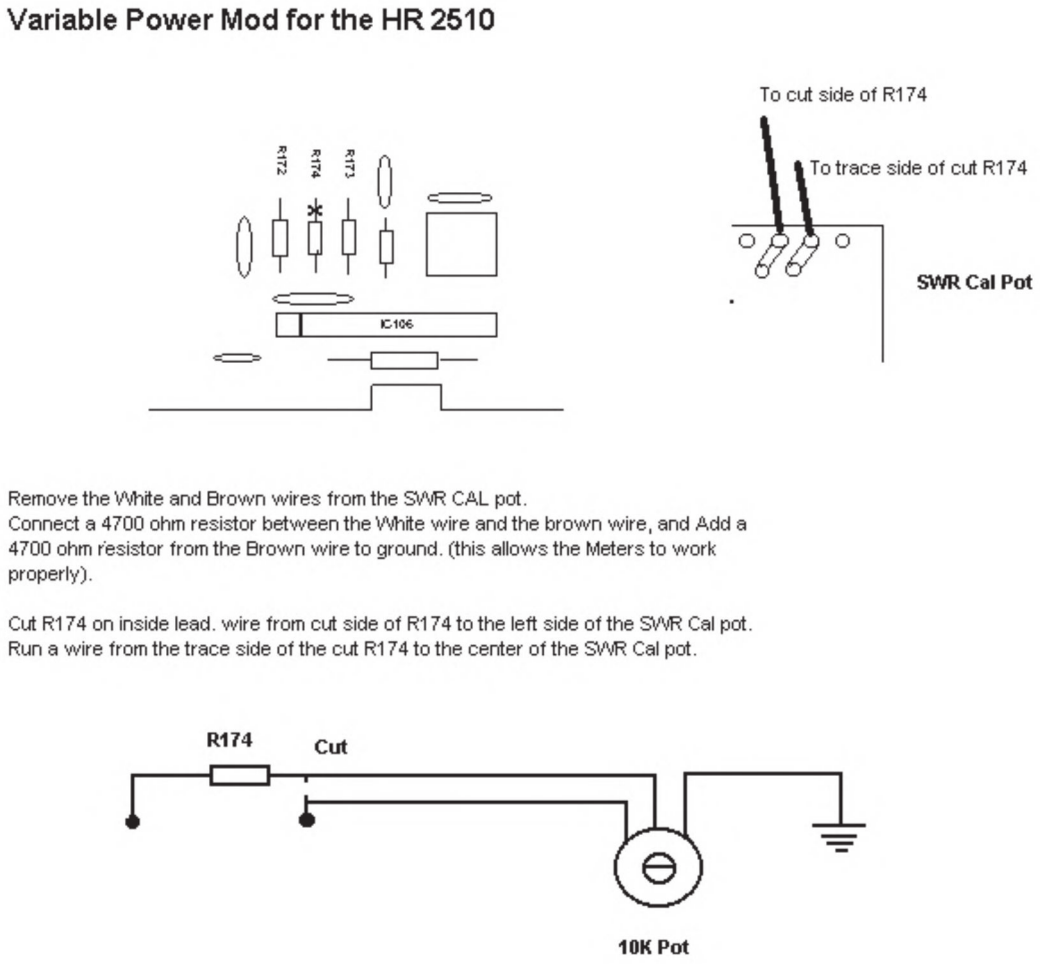

modification will allow you to fix that oversight.

Increasing the power output for the HR2510

1). Remove the top and bottom covers.

2). Locate and remove Q132 & Q134.

3). Replace Q134 with an ECG 340 or TCG340.

WARNING!!! The leads of the two transistors are exactly opposite of each other.

[2SC2086 = BCE ; ECG340 = ECB.]

4). Replace Q132 with an MRF 497. (Be sure to use heat sink compound.)

5). Remove C132. (no replacement)

6) Remove C112 & C116.

7). Replace C112 with an 82pf capacitor, But put the new Capacitor on the bottom of the PC board.

8). Replace C116 with an 100pf capacitor, But put the new Capacitor on the bottom of the PC board.

Component Layout with Cross reference for the HR2600

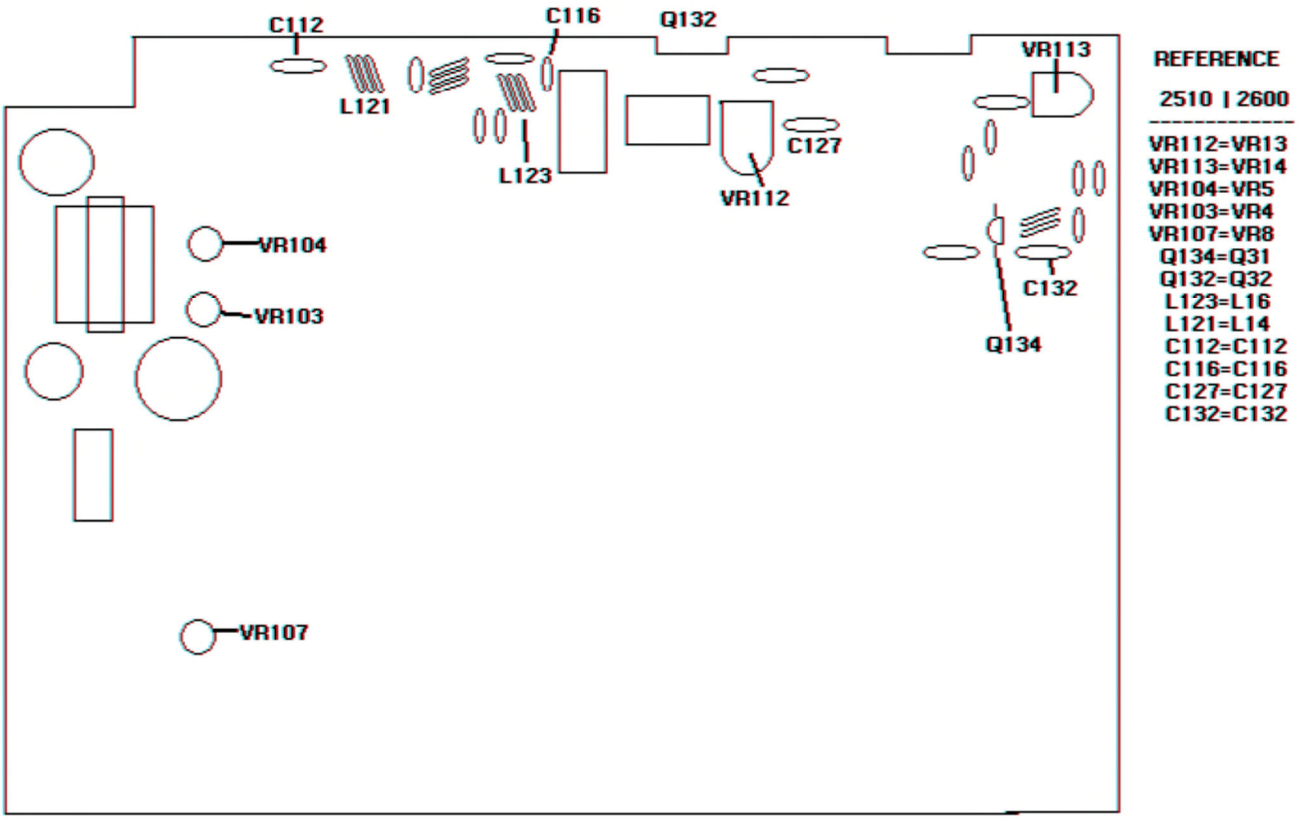

9). Connect power to the radio, and following the alignment procedures, adjust the bias of Q132 to 80mA +/- 5mA by adjusting VR112.

[To adjust the bias of Q132: Remove the B002(PB-100) jumper board from the Main PCB.

Connect a DC Ammeter (+) to TP4, (-) to TP3.

With the radio on USB, Adjust VR112 for 80mA +/- 5mA on the DC Ammeter.

After the adjustment is complete, Reinstall the B002(PB-100) jumper board.]

10). inject a two tone signal into the microphone of the radio while transmitting into a dummy load. Set VR104 (ALC) for maximum output..

Retune VR107 (AM /FM carrier level) for Maximum.

Retune VR103(CW carrier level) for Maximum

11). Again inject a two tone signal into the microphone of the radio while transmitting into a dummy load. Spread or contract coils L121 & L123 for the highest power out in the center of the band.

12). Replace the covers and the screws, you should now have between 50 and 100 watts on SSB.

This mod was originally written by M.T. Stacey, KC4HGH in an article published in CQ magazine of September 1989 on page 48. There was also supposed to be an Update in >73 magazine of November 1989 on page 76, Although I have never been able to find a copy to verify it.

Modification of the HR2510 Mic buttons to operate the VFO

Note:This modification is not needed if you have Chipswitched your radio already. The Chipswitch does this internally.

What these mods do is to disconnect the 5Khz steps and allow the Mic buttons to do what the Rotary switch does.

MOD # 1

The rotary switch applies 5 volts to activate the Up or Down control of the VFO.The Mic uses ground to activate the 5 Khz step control of the Up or Down buttons.The changes to the Mic are required because of these differences in the control operation.

The 1K resistor and 1N4001 diode combination causes the TX lead to be HI >5 volts= on receive and it protects the 5volt source on TX when the lead is grounded. (You must use a 1N4001 diode, because a 1N914 will not handle the current on TX).

Instructions:

1. Open the Mic and remove the ground from the Up and Down Switches and connect the common of the switches to the TX lead. (see diagram below) Reassemble the Mic.

2. Remove both covers from the radio and look for the Mic jack. You will find 2 resistors, one on pin #4 and the other on pin #5. Jump out both resistors with wire.

3. Find J308, located on the top left corner of the Microprocessor board. Cut the Yellow wire from the connector, leaving enough to attach a 1N4001 diode to each end, anode to J308 side cathode to the Mic jack. (see diagram below).

4. Add a 1K ohm resistor to the cathode of the 1N4001 diode and wire the opposite end to the rotary switch, connect it to the etch on the back of the switch that does not have a Grey or White wire (Orange or Brown in the Lincoln) on it. Usually the Violet wire (usually Red in the Lincoln).

5. Cut the Orange and Brown wires from J308 and route them to the rotary switch.

6. Connect a 1N914 diode across across the Grey and White wires (Brown and Orange in the Lincoln) on the rotary switch. (see diagram below).

7. Connect the Brown wire, cut from J308, to the White wire (Orange in the Lincoln) on the back of the rotary switch.

8. Connect the Orange wire, cut from J308, to the Grey wire (Brown in the Lincoln) on the back of the rotary switch.

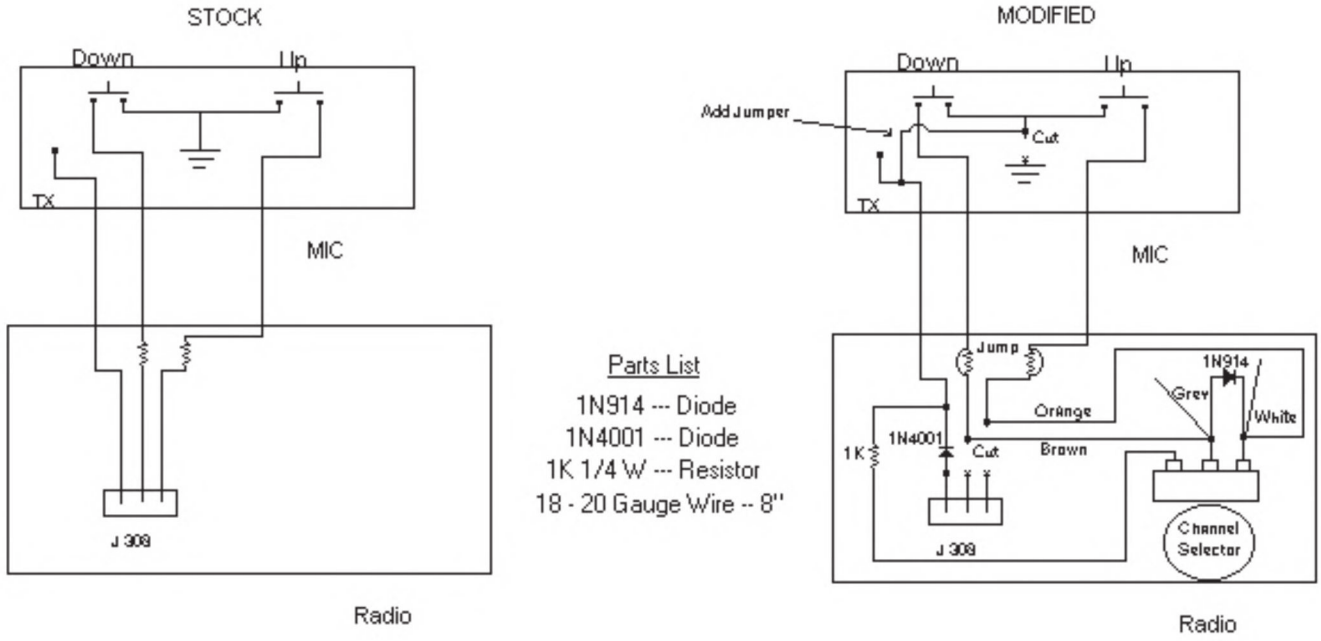

NOTE: If the Up / Down buttons work backwards, exchange the Orange and Brown wires.

MOD # 2

Mod #2 is the same principal as Mod #1, But uses a Solid State approach, and does not require rewiring of the Microphone.

This Mod also allows for an automatic frequency increase or decrease as long as you hold the button down.

The rotary switch applies 5 volts to activate the Up or Down control of the VFO.The Mic uses ground to activate the 5 Khz step control of the Up or Down buttons.

Using a 4001 CMOS quad 2 input NOR gate, you can create a multivibrator to generate a pulsed output to allow the >automatic= function of the mod. The rest of the 4001s gates are used as gated inverters.

When the UP button is pressed it grounds pin 13, causing the pulse train on pin 12 to be outputed to pin 11 through the isolation resistor to the white wire on J307, this will increment the frequency of the selected digit on the HR2510, about 1 digit per pulse as long as the button is held down.

When the DOWN button is pressed it grounds pin 9, causing the pulse train on pin 8 to be outputed to pin 10 through the isolation resistor to the grey wire on J307, this will decrement the frequency of the selected digit on the HR2510, about 1 digit per pulse as long as the button is held down.

Instructions:

Refer to the Diagram below and create the circuit shown. You can use an experimenters perf board from Radio Shack (P/N 276-158A) and there is ample room in the HR2510 to mount it inside.

Hookup:

1. Connect the brown wire cut from J308 to the input pin 13 on the 4001 CMOS IC.

2. Connect the orange wire cut from J308 to the input pin 9 on the 4001 CMOS IC.

3. Connect the output wire from the Isolation resistor on pin 11 of the 4001 CMOS IC to the top trace on the frequency knob. (the white wire).

4. Connect the output wire from the Isolation resistor on pin 10 of the 4001 CMOS IC to the 2nd trace from the top trace on the frequency knob. (the grey wire).

5. Connect the power wire to the 5 volt regulator pin 3 (facing the front of the radio, the far right leg of the L78MO5CV, located in the middle of the microprocessor circuit board). [see diagram]

6. Connect the ground wire to a good circuit ground.(you can use the left rear screw on the

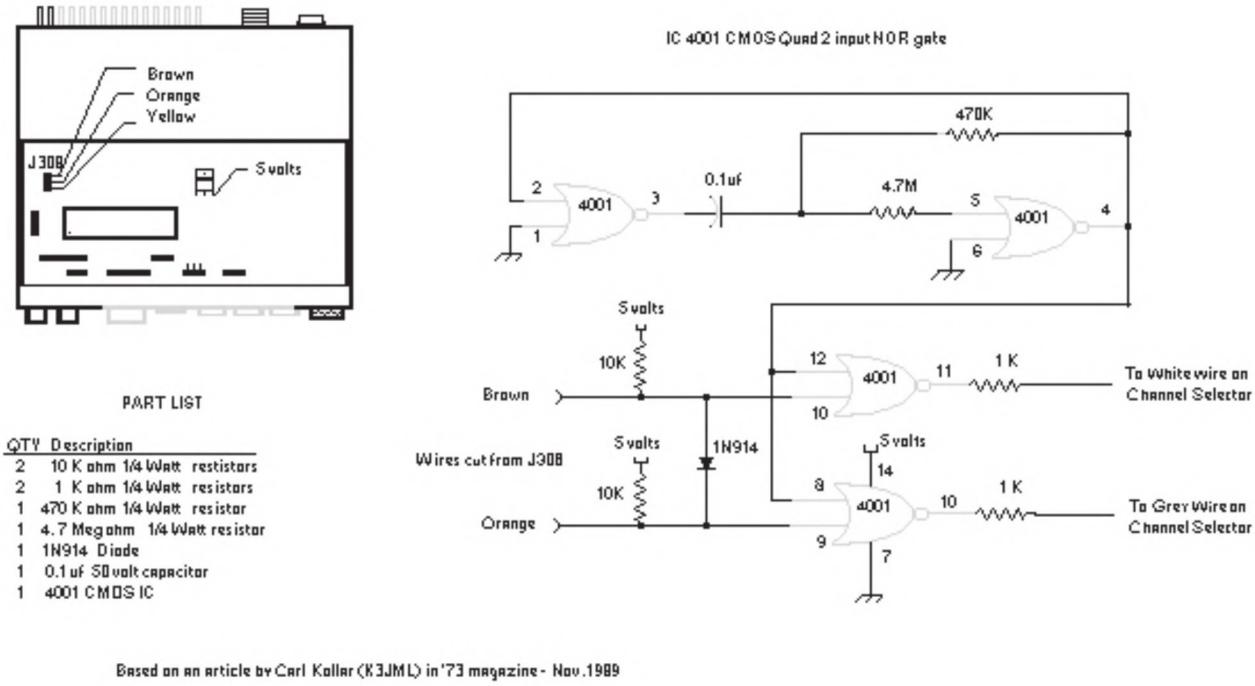

microporcessor board mounting).

After installation all the controls should work normally, and when pressing and holding the mic buttons the frequency should slide up or down the band at about 2 increments a second.

If you have any questions, you can E-mail me. Although I have not tried this mod (MOD #2) it is fairly straight forward.

Talkback Removal

MOD #1 - The Relay Approach

One method of Talkback removal is to break the speaker line with a relay.

Parts needed :

12Volt SPDT relay

2 - 1N4148 Diodes

1 - 1N 4001 Diode

Several pieces of hookup wire

Jumper the Relay coil - K1 with a 1N4001 Diode - D1. To key the relay you connect one side of the Relay coil (the side with the Cathode of the diode) to IC107 pin 1.(HA17808W)

Cut the Blue wire that goes to pin 1 of the AUX plug on the rear of the radio. (Make sure you leave enough wire to reconnect each end to wires for the relay.) Attach the wire from pin 1 of the AUX plug to the Wiper contact of the Relay- K1. Attach the other half of the Blue wire to the Normally Closed side of the Relay.

(Make sure you leave enough wire to reconnect each end to wires for the relay.)

Cut the Yellow wire from pin 3 of the Mic plug. Jumper the cut Yellow wire with a 1N4148 Diode - D2 (Cathode to the Mic Plug Pin 3) Connect the last 1N 4148 Diode - D3 to the Relay coil, Anode side to the Anode of the Diode - D1 on the coil of the relay.Connect the Cathode to Pin 3 of the Mic plug.(Cathode to Cathode of the two diodes on pin 3 of the Mic plug.)

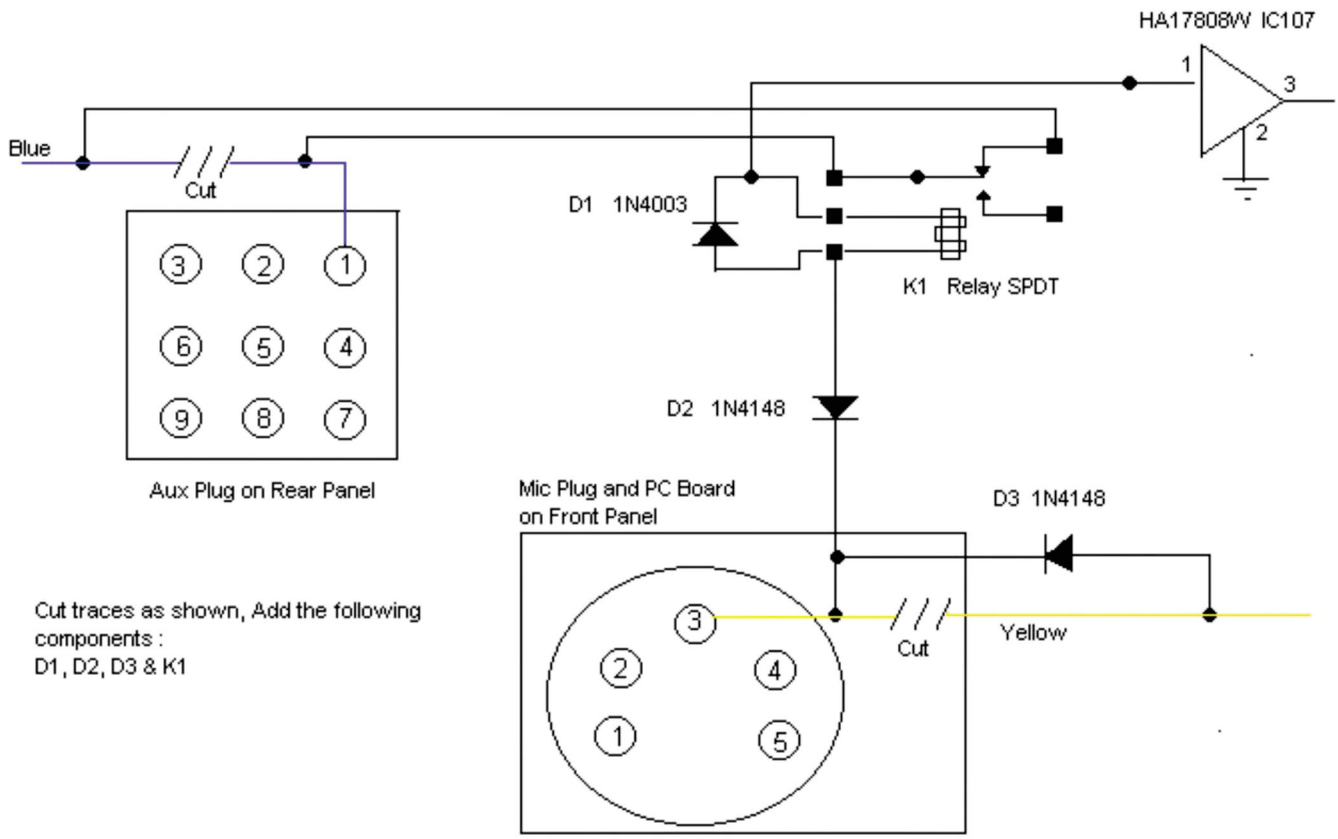

MOD #2 - The Solid State Approach I

All that is needed is to add a 1N914 Diode from pin 6 of IC103 to the collector of Q125.

Connect the cathode of the diode to pin 6 of IC103, and the anode to the collector (the center pin) of Q125.

TALKBACK ELIMINATION MOD 2

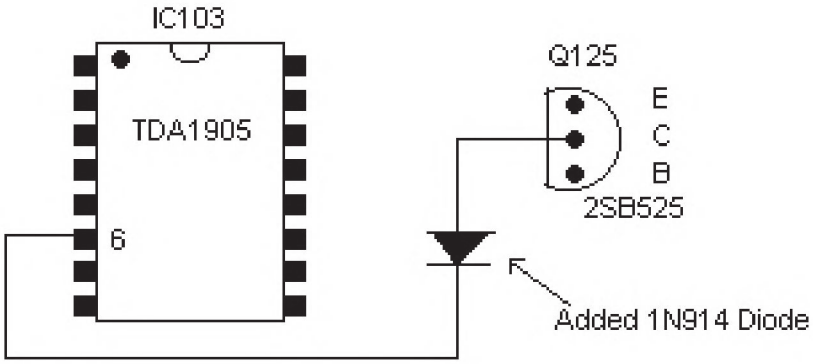

TALKBACK ELIMINATION MOD 3

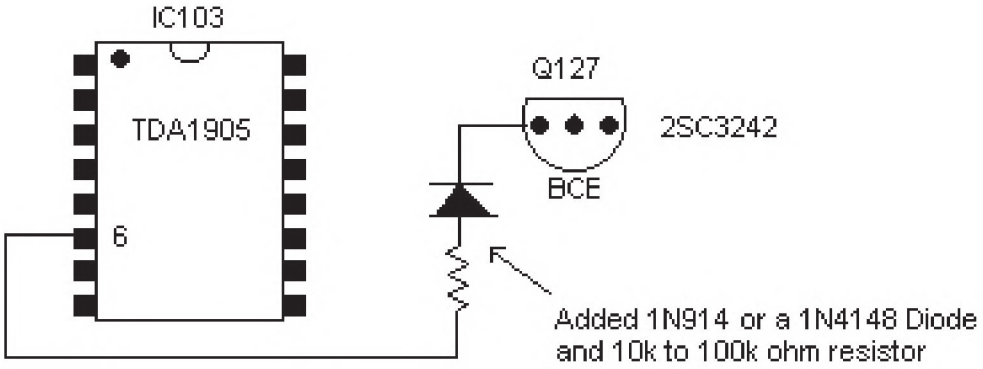

NOTE: Use a 10k ohm resistor if you only use the internal speaker.
Use a 100k ohm resistor if you use a external speaker.

MOD #3 - The Solid State Approach II

All that is needed is to add a 1N914 or a 1N4148 Diode connected to a 10k to 100k resistor from pin 6 of IC103 to the Base of Q127.

Connect the anode of the diode to one side of the resistor. Connect the other side of the resistor to pin 6 of IC103, and the cathode to the Base of Q127.

Note: Use a 10k ohm resistor if you only use the internal speaker. Use a 100k ohm resistor if you use an external speaker.

These last 2 MODs remedies the Audio Feedback caused by the Audio Amplifier chip, IC103 (TDA 1905) not being switched over completely from RX to TX when you key the mike. These fixes rebias the switiching transistor to correct this.

HR2510 RIT / Clarifier Mods

The RIT (Receiver Incremental Tuning) on the HR2510 is a Clarifier control to help >tune in= usually SSB signals that may be transmitted off of center. The RIT only works on the receiver. The HR2510 does not allow >slide= on transmit unless its modified. Many people wish to >Open= the RIT (or Clarifier).

Everyone has a different mod for this one, I will list the ones I know. Basically they are about the same, You need to disconnect the existing voltage from the clarifier (RIT) circuit and add a constant voltage to the clarifier (RIT) control circuit.

This voltage needs to be there during transmit.

RIT MOD I

Find D150 on the main circuit board. With the radio right side up, it will be found in the front right-hand corner of the PCB.

Lift or clip one end of this diode.

Find the orange wire comming from the RIT/RF GAIN PCB (PB-120). From there it goes to the main PCB to a 4 wire connector (Yellow/Orange/Red/Brown) located on the left side of the main PCB near the center of the radio. Clip the orange wire from the connector and feed it through to the other side of the radio. Solder it to pin 3 of IC 311. This will be a three-pin voltage regulator located just to the right of the large microprocessor (IC315). The pins on IC 311 are numbered from left to right.

To center the RIT:

Locate the 3 tuning coils on the front left corner of the main PCB. The exreme left coil labeled L116, adjusts USB. The center coil is labeled L118, adjusts LSB. The right coil labeled L117, adjusts CW. There will be some interaction between the coil adjustments so you may need to repeat retuning a few times. I suggest you start with the USB coil and end with the CW coil.

The Mod will give you plus or minus 3 Khz slide, the RIT will NOT change the display, but the transmit and receive frequency will track together now.

RIT MOD II

Cut D150 on the main PCB. Locate the orange wire at the top of the RIT PCB, cut and connect to pin 3 of IC107. This is a 3 pin transistor bolted to the left side of the case next to VR116. Pin 3 is the lead closest to the back of the radio. You now have +/- 5khz slide.

RIT MOD III

Find the orange wire comming from the RIT/RF GAIN PCB (PB-120). From there it goes to the main PCB to a 4 wire connector (Yellow/Orange/Red/Brown) located on the left side of the main PCB near the center of the radio. Clip the orange wire from the connector. Find the red wire (8 Volts) on the mode switch PCB and solder the orange wire to it.

To Adjust:

Set the RIT to center (12 o=clock) Mode switch to AM Frequency to 28.000 Mhz.

Connect a Frequency counter to TP306. Adjust L315 for 6.200Mhz

Connect a Frequency counter to TP304. Adjust L318 for 38.695Mhz

Connect a frequency counter to TP1.

Set the Mode switch to USB, adjust L116 for 10.6975Mhz.

Set the Mode switch to LSB, adjust L118 for 10.6925Mhz

Set the Mode switch to CW, adjust L117 for 10.6950Mhz

Check RIT range. It should be +/- 4Khz

RIT MOD IV

Find the orange wire comming from the RIT/RF GAIN PCB (PB-120). From there it goes to the main PCB to a 4 wire connector (Yellow/Orange/Red/Brown) located on the left side of the main PCB near the center of the radio. Clip the orange wire from the connector. Solder the orange wire to Jumper 13 (JP13) +8V constant . Cut D150.

To center the RIT: With the Mode switch to AM, Frequency at 28.000Mhz, RIT at 12 o=clock, connect a frequency counter to TP304, adjust L318 for 38.695Mhz.

HR2600 NOTE:

D150 is for the HR2510, D43 is for the HR2600, also in the HR2600 the wire may be orange or brown. The

connector on the main PCB is a 5 wire connector.

HR2510 Misc. Enhancements.

Increasing the Receive Audio I

The HR2510 does not have a by-passed emmiter in the audio circuit. To correct this, Add a 4.7uf 16v Electrolytic capacitor across (in Parallel) with R152 (a 560 ohm resistor). This modification will increase the receive audio.

Increasing the Receive Audio II

This mod will increase the AM reception: Replace the AM Detector diodes (D111 & D112) with better Schottky Barrier diodes. You can use ECG 583 or NTE 583 diodes or 1N6263 or equilvalent. (In the HR2600 the diodes are labelled D11 & D12).

Increasing the Receive Audio III

This mod will increase receive strength and dynamic range, resulting in louder, cleaner signals while actually reducing noise levels. All you need to do is to replace the existing IF Amp transistor with a new one which has greater frequency response and lower noise characteristics. Once installed you will need to adjust your AS@ meter for more realistic readings.

1.) Remove diode D101 and Transistor Q101.

2.) Replace Q101 with a ECG or NTE 23.

NOTE: The new transistor has a different pin out from the original. You will need to reorient the new transistor to work. With the flat side of the transistor facing you and leads pointing down : Exixsting leads of Q101 = 1 2 3 , the replacement ECG or NTE, you will need to cross the first lead to the last = 2 3 1 .

Mute circuit improvement

To Improve the operation of the Mute circuit, remove C139 and R199. These two components are connected to the base of Q117.

Roger Beep Mods

The Roger Beep in the HR2510 is >Unique= but kind of wimpy..To modify this, locate R96 (a 2.7 Meg. ohm resistor).

Remove and replace with a 100K ohm 1/8 watt resistor. This will increase the amplitude of the beep.

To change the duration (length) of the beep, replace C110 (10uf 16v) remove and replace with a capacitor at least 50v with more or less capacitance to lengthen or shorten the beep to your preference.

These components are located to the left (facing the front of the radio) of IC 104.

Component location diagram

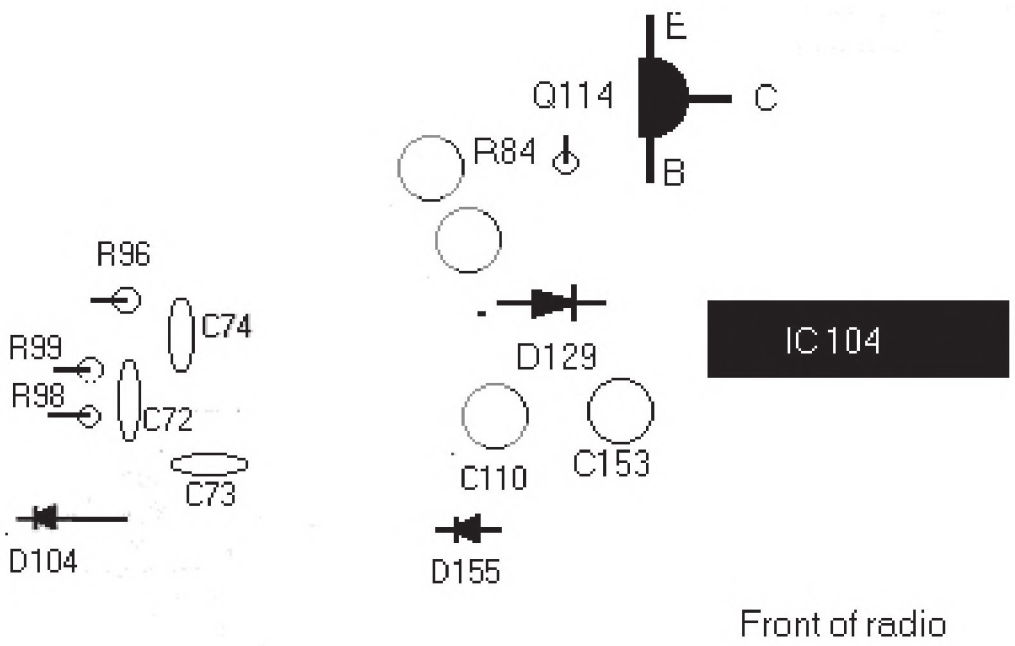

Adding an external meter to the HR2510

To add a needle type meter all you need to do is connect it to C302 on the Microprocessor.

If you are really interested, I suggest trying the CHIPSWITCH.

It gives you :

1) 30 memory channels, with temporary channel lockout and repeater offsets.

2) Extended frequrncy covreage - 24.800 to 29.999 Mhz.

3) Programmable Scan/Seek functions. Scan-This allows you to set a range of frequencys in any band, and even set the hold time during scans.

Seek-This causes the radio to seek for active channels. both features are programmable from 5khz or 10 Khz steps.

4) Programmable channel up and down buttons. This is the ability to program the radios channel up and down button to change channels/freq. in any one of 5 different ways (5Khz, 10Khz, underlined digit, etc.).

5) Programmable Mic channel up and down buttons. This allows programming the mic up/down buttons in any of 8 different ways.

6) Split freq operation.

7) programmable Xmit time out.(a built in QSO timer)

8) Programmable transmit freq. range.

9) Span underline cursor- allows 100Khz steps on the channel buttons, And the underlined digit can be changed with the Mic Buttons.

10) Programmable button repeat.

11) Programmable button beep duration.

12) (in the 2600) RPTR button will toggle the xmit of CTCSS tones from a memory channel.

This is a very versatile update. It does require the ability to remove the Microprocessor and solder in a new one. But it is fairly easy with a little soldering experience, and the right tools.

It comes with a complete manual and installation instructions. The cost from the manufacturer is now only $49.95, and its availiable from copper electronics, if you want to go that way (I think Copper charges $69.99).

Chipswitch can be ordered by Phone directly from the manufacurer, there address is:

CHIPSWITCH

4773 Sonoma Hwy. Suite 132

Santa Rosa, Ca. 95409-4269

Phone: (707) 539-0512 (answering machine for orders and info)

or you can visit their Website at: www.chipswitch.com

You can call them and order an information sheet prior to ordering the Chipswitch.

I reccommend this mod highly! Its easy and it does not require any new switches. It uses all the existing switches and buttons.

24 MHZ Broadband instructions for your HR2510

These instructions are to broadband your radio if you have the 24.000Mhz mod or the ChipSwitch installed.

MOD #1

1. Take the four screws out of the speaker cover on the radio.

2. With the radio upside down and the PLL board facing you, Remove the four screws in each corner of the pll board.

3. Loosen the four screws on the sides of the radio that hold the PLL tray in the radio. Loosen them all the way before they come completely out.

4. Pull the PLL board out towards you so the bottom of the PLL board is upside down.

5. Look at the diagram below and locate C304, C326, & C327. At the point where they connect together, you will place 1 leg of a 50V 220pf capacitor (Radio Shack P/N 272-124) and the other leg to

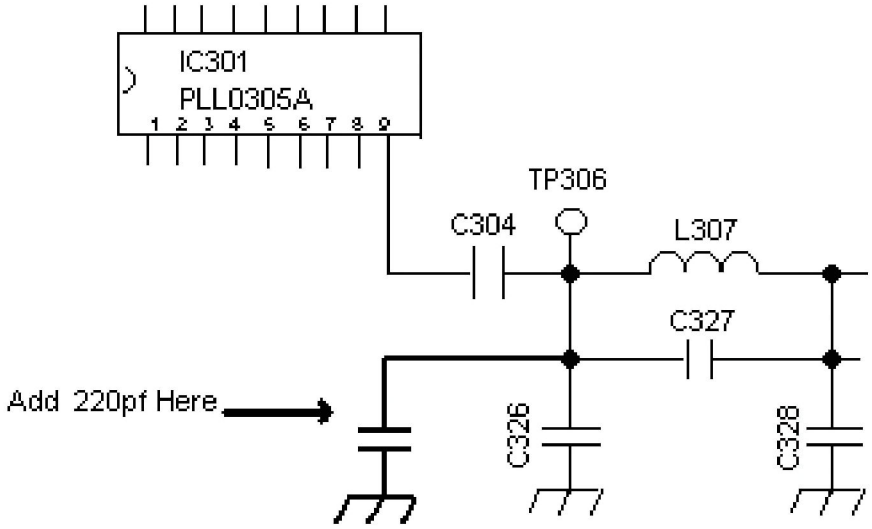

Ground of the board.

6. Check your work and make sure you did not short anything out and that you placed the capacitor in the right place.

7. Reassemble the PLL board and connect power to the radio.

8. Connect a watt meter and a dummy load to the antenna jack.

9. Put the radio on 29.500.Mhz and peak L310 for maximum output power.

10. Now put the radio on 25.500Mhz and peak L319 for maximim output power.

11. Reassemble your radio and your ready to go.

MOD #2 A simpler method...

Here is a simpler method of increasing the VCO coverage on the HR2510. If your HR2510 is Chipswitched, but doesn't lock on 12 Meters, this mod will take care of the problem without having to access the underside of the synth PCB.

Remove the four screws from the bottom cover and remove the cover.

On the PLL board locate L307 (TP306).

Install a small ceramic capacitor between the long lead of L307 and ground. Any value between 180 and 220 picofarad (pf) will do. There is a convenient ground loacted just behind L307. this locationis

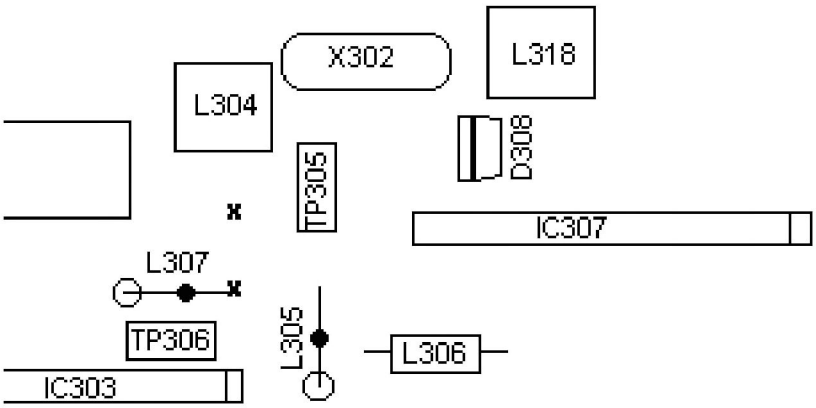

The VCO range is extended by connecting a 180 to 220pf Capacitor between the two pointsmarked " x ".

a plate-through hole (it looks like a shiny solder dot showing through the silk screening.)

The set should now lock from 24.800 to 29.900Mhz without further adjustment.

If you have access to a scope, the radio can easily be broadbanded for better performance in this new frequency range. to broadband, monitor the output at J311 and adjust L310 and L319 for equal output at the upper and lower limit of your operating range.

HR2510 Alignment Instructions - (Taken from the Uniden Service Manual)

Alignment of P.L.L. and Carrier Oscillator Portion

1. Test equipment required:

DC Power supply (13.8V)

DC Voltmeter

Dummy Load (50 Ohm)

Frequency Counter

Oscilloscope

2. Preperation for Alignment:

PA SW : Off **Mode SW : AM**

RIT : Middle Position **TX SW : Off**

3. Alignment Procedure:

	Preset to:	Adjustment	Remarks
1	Mode : RX, AM SG : 28MHz	L315	Connect an oscilloscope to TP306. Adjust L315 For 6.200MHz +/- reading on the oscilloscope.
2	Ditto	L318	Connect the oscilloscpe to TP304. Adjust L318 for 38.695MHz +/- 20Hz reading on the oscilloscope.
3	Mode : RX, AM SG : 29.6999 MHz	L317	Connect a DC Voltmeter to TP303. Adjust L317 for 6.5 +/- 0.1V reading on the Dc Voltmeter.
4	Mode : RX, CW SG : 28 MHz	L117	Connect the oscilloscope to TP1. Adjust L117 for 10.6950MHz +/- 20Hz reading on the oscilloscope.
5	Mode : RX, LSB	L118	Adjust L118 for 10.6925MHz (-40Hz to +0Hz) reading on the oscilloscope).
6	Mode : RX, USB	L116	Adjust L116 for 10.6975MHz +/- 20 Hz reading on the oscilloscope.
7	Mode : RX, USB	VR111	Connect the oscilloscope to TP5. Adjust VR111 for 38.6975MHz +/- 20 Hz reading on the oscilloscope

Alignment of Transmitter Portion

1. Test equiptment required:

DC Power supply (13.8V) more than 10A

AF S.S.G. AM FM (1kHz, 500Hz and 2400Hz)

RF VTVM **Oscilloscope**

DC Ammeter **RF Power Meter**

AF VTVM **Dummy Load (50 Ohm)**

FM Linear Detector

2. Preperation for Alignment:

VR112 : Clockwise **PA SW : Off**

VR113 : Counter Clockwise **Meter SW : RF**

VR103 : Clockwise **MicGain SW : Off**

SWR/CAL : Middle Position **TX SW : Off**

Freq. : 28.000 MHz

3. Alignment Procedure:

	Preset to:	Adjustment	Remarks
1	Mode:USB No Mod.	VR112	Remove the B002(PB-100) from the Main PCB. Connect a DC Ammeter (+) to TP4, (-) to TP3. Adjust VR112 for 50mA reading on the DC Ammeter.
2	Ditto	VR113	Connect a DC Ammeter (+) to TP4, (-) to TP2. Adjust VR113 for 50 mA reading on DC Ammeter.
3	1mV Mod.	L111	Disconnect DC Ammeter. Reinstall the B002 to the Main PCB. Connect A RF Power meter to the ANT. jack. Connect a RF VTVM, an oscilloscope and a FM Linear Detector across a RF Dummy Load to the RF Power meter. Adjust L111 for maximum reading on the RF VTVM. During this step, set the AF oscillator so that the output is less than 20V. Repeat this two times.

4	30 mV Mod.	VR104	Adjust VR104 for 32.5V reading on the RF VTVM.
5	Ditto	VR106	Adjust VR106 so that the carrier leakage at USB and LSB becomes minimum and almost equal.
6	Mode: CW No Mod.	VR103	Connect a SW between Pin 8 and 9 of the ACC connector. With the SW turned on, adjust VR103 for 21W reading on the Power meter.
7	Mode: AM No Mod.	VR107	Adjust VR107 for 10W reading on the RF power meter.
8	Ditto	VR117	Adjust VR117 so that "9" LCD just lights on.
9	1 kHz, 30mV Modulation	VR114	Adjust VR114 to obtain the 85% negative reading on the oscilloscope.
10	1kHz, 1mV Modulation INDIC: MOD	VR115	Adjust VR115 so that "9" LCD just lights on.
11	Mode: FM 1kHz, 30mV Modulation	VR105	Adjust VR105 for +/- 3kHz deviation reading on the FM Linear Detector.
12	Mode: CW No Mod. Vol. : Max	VR116	Connect a AF VTVM across a dummy load (8 Ohm) between Pin 1 and Pin 2 of the ACC connector. With the SW turned on, adjust VR116 for 0.4V negative reading on the AF VTVM.

Alignment of Receiver Portion

1. Test equiptment required:

AF VTVM **DC Power supply (13.8V)**

Oscilloscope **Dummy Load (50 Ohm)**

S.S.G. AM FM (28.000MHz, 1KHz, 30% Mod. and 50 Ohm Impedance)

2. Preperation for Alignment:

NB SW : Off **Mode : AM**

PA SW : Off **Squelch : Min. (Auto SQ Off)**

Beep SW : Off **RF Gain : MAX**

VOLUME : MAX **TX SW : Off**

RIT : Middle position

3. Alignment Procedure:

	Preset to:	Adjustment	Remarks
1		L101, L104, L113, L115, and L105	Alignment of sensitivity Adjust coils for maximum reading of the AF VTVM. (During this step, set the S.S.G.attenuator so that the standard output is less than 0.5W (2v/8ohm)).
2		VR102	Alignment of Squelch Set th output of the S.S.G. to 66dB +/- 2dB and squelch to maximum. Adjust VR102 so that squelch just breaks.
3		VR101	Alignment of S-Meter Set the output of the S.S.G. to 46dB, no modulation. Adjust VR101 so that "9" LCD just lights on.
4	Mode : FM S.S.G. : 1mV (1.5kHz Dev.)	L401	Adjust L401 for maximum reading on AF VTVM.
5	Mode : AM Noise GEN. to the ANT Jack.	L203	Adjust L203 for minimum reading on the AF VTVM. (Noise GEN. OUTPUT : 50Hz SQ Wave 2Vp-p)

HR2510 Alignment and Test Point Layout

Refer to the HR2510 Alignment instructions

(The colors correspond to the adjustment procedure)

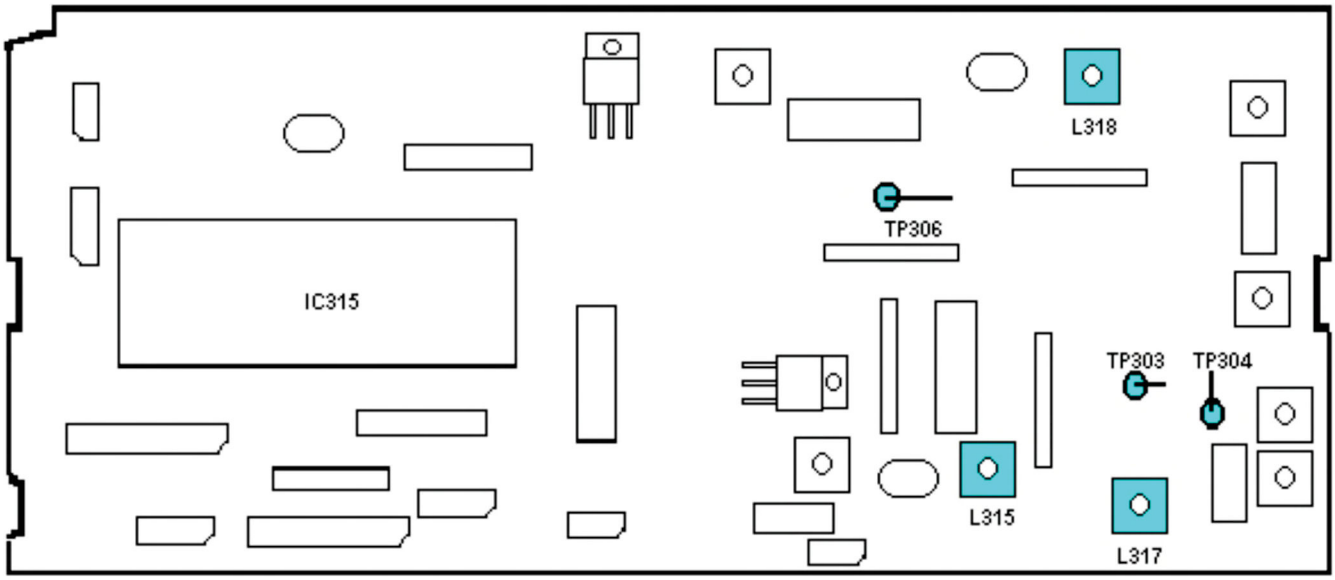

Synthesizer / Microprocessor / PLL PCB

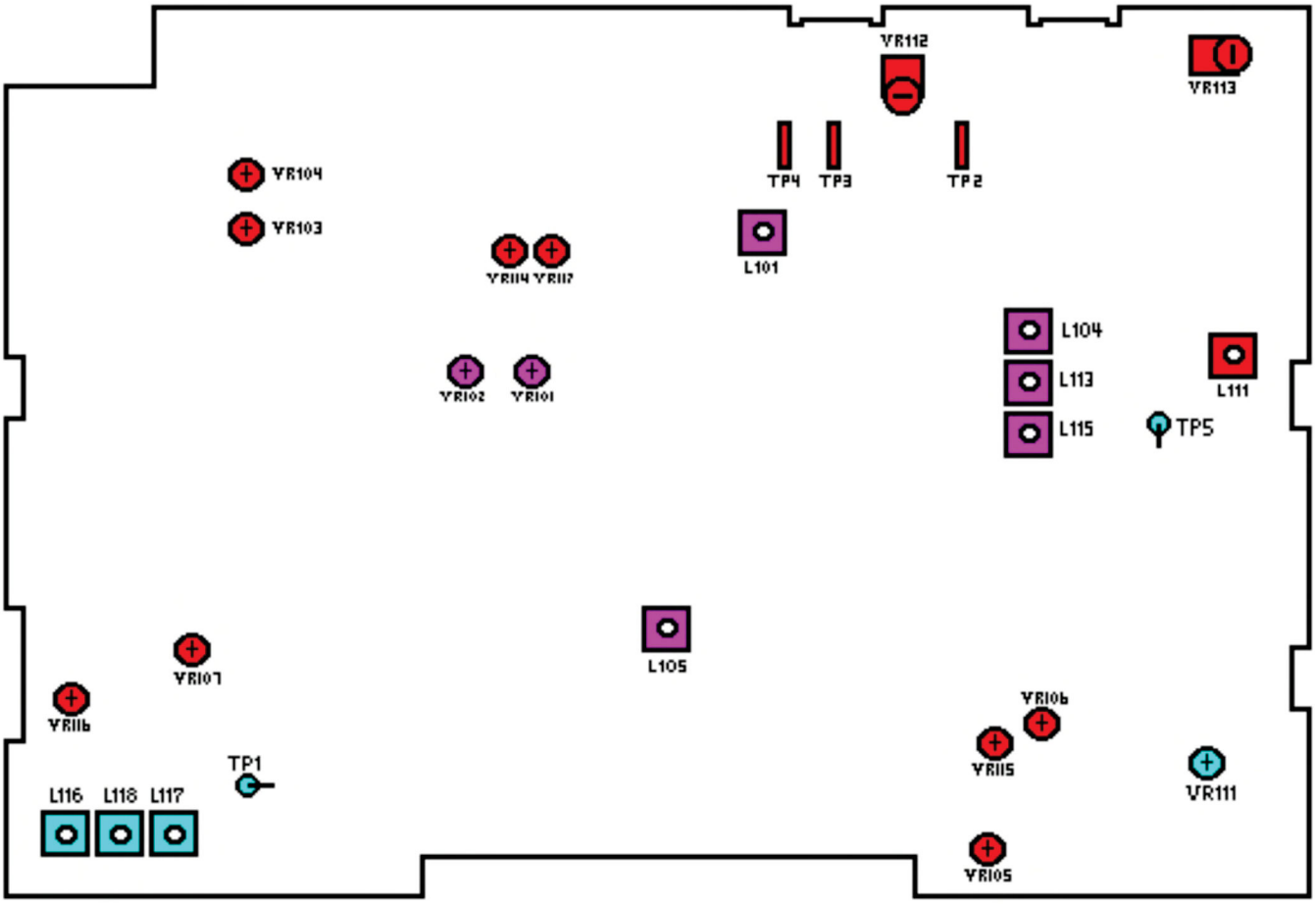
VR112
VR113
TP4
TP3
TP2
VR104
VR103
VR114
VR107
L101
L104
L113
L115
L111
TP5
VR102
VR101
L105
VR107
VR116
VR106
VR115
VR111
TP1
L116
L118
L117
VR105

Main PCB

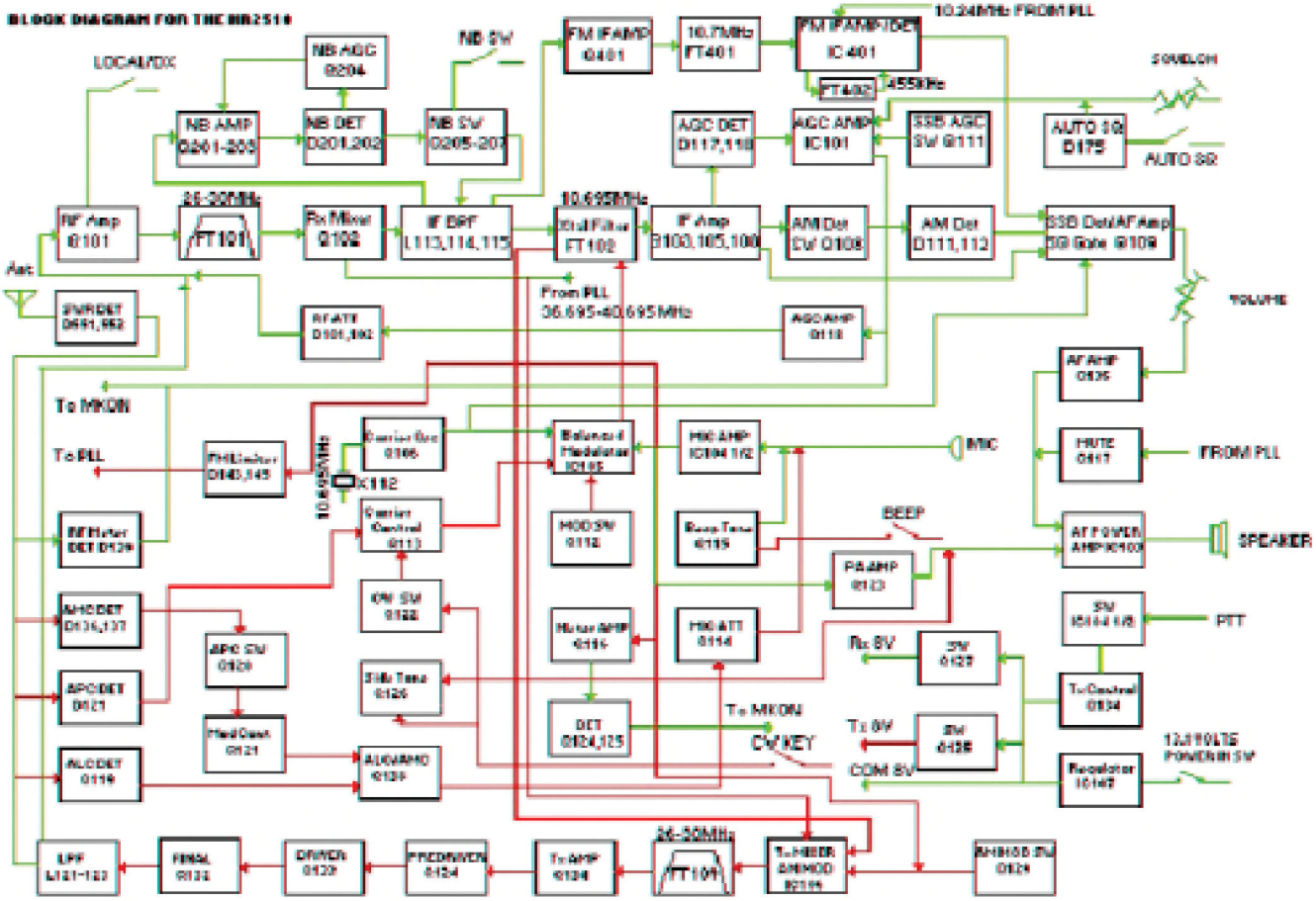

HR2510 Circuit Block Diagram

Microphone wiring

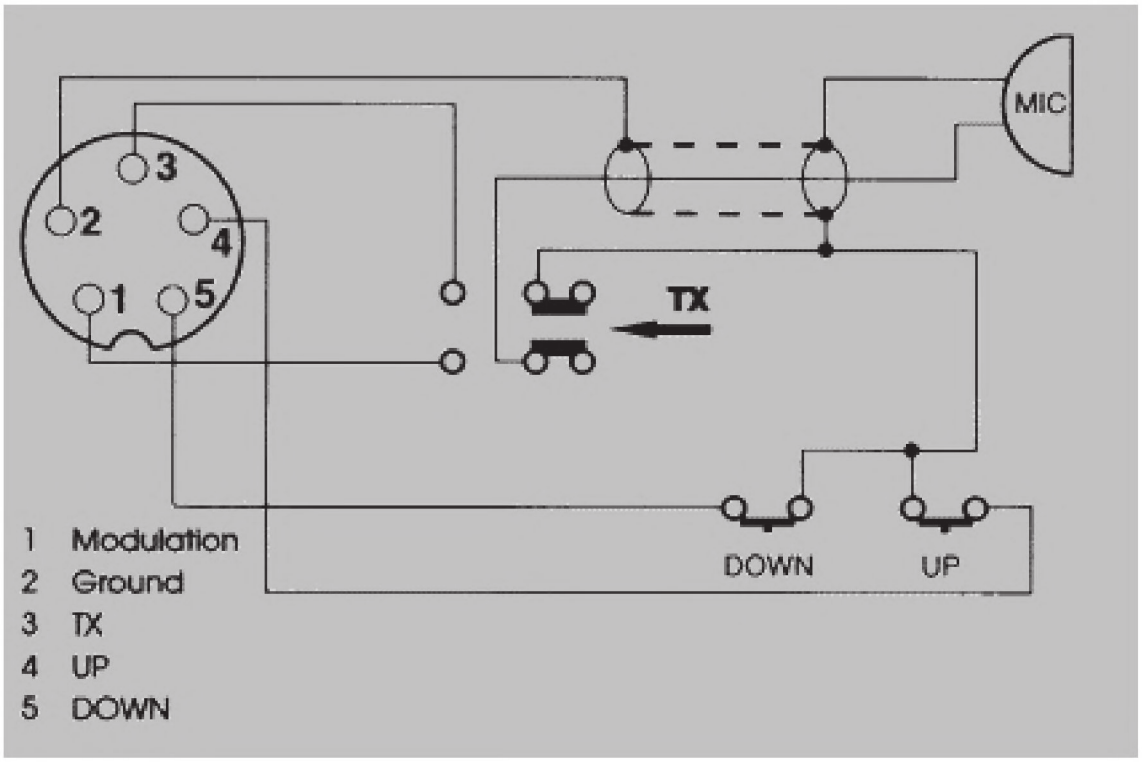
MIC
3
2
4
1
5
TX
DOWN
UP
1 Modulation
2 Ground
3 TX
4 UP
5 DOWN